SOH3179

CITY OF GAHANNA, OHIO
DEPARTMENT OF DEVELOPMENT
REQUEST FOR PERSONAL WIRELESS SERVICE FACILITIES ("PWSF")
PREVIOUSLY APPROVED CO-LOCATION
(Pursuant to City of Gahanna Codified Ordinance Chapter 1181 also known as City of Gahanna Personal Wireless Service Facilities Ordinance ("PWSF Ordinance"))

Permit# PWSF-2-2016/16040015
Date Rec'd 4/11/15 + 4/15/15 signed
Tier 1

INFORMATION (Please print or type)

Business Name	BOARD OF EDUCATION	Phone Number:	
Contact Person:		Fax Number:	
Business Address:	140 S HAMILTON ROAD GAHANNA, OH	Email:	
Agent Name:	VIRGINIA ROTH, SURESITE ON BEHALF OF AT&T	Phone Number:	773.867.2961
Business Address:	8770 W BRYN MAWR SUITE 1300 CHICAGO, IL 60631	Fax Number: Email:	216.593.0401 V.ROTH@SURE-SITE.COM

24 Hour System Representative(s) (in order to be contacted):

	Name	Business #	Mobile #	Email
#1	AT&T Network Operations	800.638.2822		INFO@ATTLANDLORDS.COM
#2	Control Center			
#3				

Is Co-Location on: ☒ a Mount ☐ the ground?

Location and Siting Information
511 HAVENS CORNERS ROAD (a/k/a 140 S HAMILTON ROAD), GAHANNA, OH

Narrative Information (Section 1181.08.E) REMOVE (3) ANTENNAS AND INSTALL (3) ANTENNAS AND (3) RRHs (REMOTE RADIO HEADS)
THERE IS NO CHANGE TO THE GROUND SPACE OR TOWER HEIGHT.

On behalf of AT&T / SURESITE CONSULTING (Applicant), I hereby acknowledge that I have reviewed the City of Gahanna Codified Ordinance Chapter 1181 and certify that to the best of my knowledge the above and all attached information is complete and correct and conforms to Chapter 1181, as of this 14 day of APRIL, 2016.

V Roth
Virginia Roth, Name — Site Development Specialist, Title

STATE OF ~~OHIO~~ Illinois :
COUNTY OF Cook : ss.

Before me, a Notary Public in and for said State and County, personally appeared Virginia Roth (Name), on behalf of Sure Site Consulting (Applicant), its SDS (Title), who acknowledged the signing of the foregoing Application, who states that this is the free act and will of the Applicant and that they are authorized by the Applicant to sign this Application.

IN WITNESS WHEREOF, I have hereunto signed my name and affixed my official seal on the 14 day of APRIL, 2016.

"OFFICIAL SEAL"
PATRICK MAHONEY
NOTARY PUBLIC, STATE OF ILLINOIS
MY COMMISSION EXPIRES 3/30/2019

Notary Public

Bonnie Gard 4/20/16

{H1324863.1 }

SOH3179

CITY OF GAHANNA

Agreement to Construct as Approved

Your signature below affirms that, as the contractor HEIGHTS TOWER SERVICE
(Please print Contractor Name)

_____ for AT&T _____,
(Business Name and/or Address)

the above named project will be built as approved and specified by the City of Gahanna Planning Commission As the contractor, you also agree that any proposed change to the approved plans must be reported to the Planning and Zoning Administrator. Significant changes to the project, as determined by the Planning and Zoning Administrator, must approved by Planning Commission.

Contractor Name/Representative _____
(Please sign)

Date APRIL 4, 2016

_____
(Signature of Notary)

4-4-16
(Date)

JASON LE HEW - NOTARY PUBLIC
STATE OF OHIO
Seal

AT&T MOBILITY

PROJECT: LTE 3C
AT&T SITE ID: SOH3179
AT&T FA#: 10011777
CROWN CASTLE BU #: 840290

GAHANNA HIGH SCHOOL
GAHANNA, OH 43230

SITE PHOTO

PROJECT INFORMATION

SITE ADDRESS:	511 HAVENS CORNERS ROAD GAHANNA, OH 43230
COUNTY:	FRANKLIN
SITE NAME:	GAHANNA HIGH SCHOOL
SITE NUMBER:	SOH3179
FA NUMBER:	10011777
USID NUMBER:	59304
LATITUDE:	40° 00' 59.40" N
LONGITUDE	82° 51' 49.78" W
GROUND ELEVATION:	813' AMSL
TOWER OWNER:	CROWN CASTLE 1500 CORPORATE DRIVE CANONSBURG, PA 15317
SITE ACQUISITION MANAGER:	GREG THOMPSON 412.298.8230
CONSTRUCTION MANAGER:	LARRY GOLONKA 412.747.9620
LEAD ENGINEER:	CHRIS NICHOLS 913.458.6293

PROJECT MANAGER:	–
PHONE:	–
APPLICANT:	AT&T MOBILITY
CONTACT:	–
PHONE:	–

AREA MAP

VICINITY MAP | LOCAL MAP

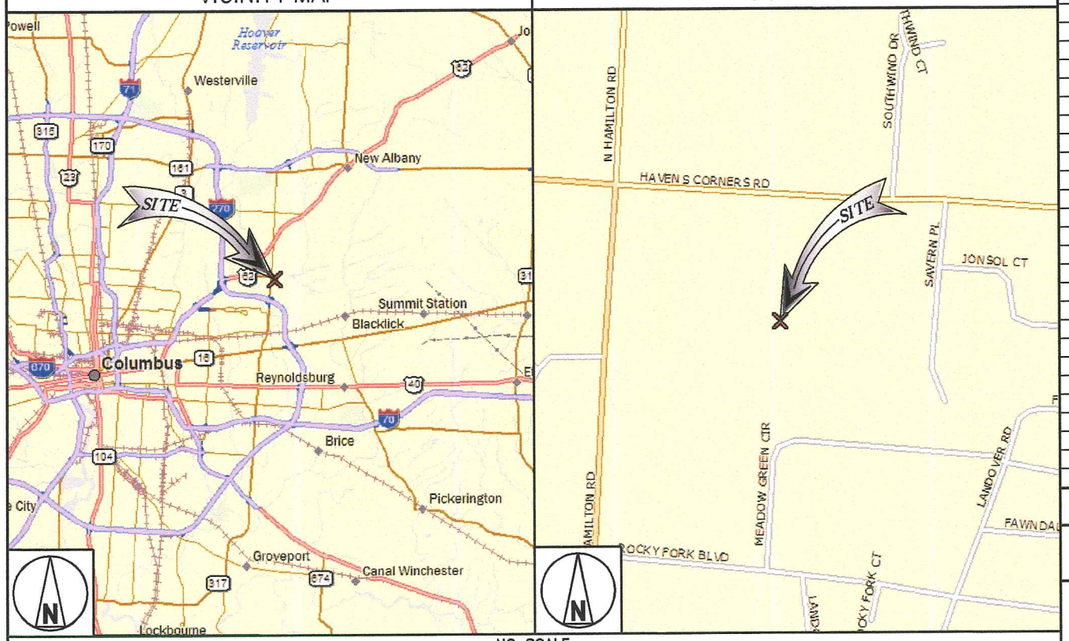

NO SCALE

DRIVING DIRECTIONS

DEPART FROM E BROAD STREET, RIGHT ONTO OH-16 W/E BROAD STREET/COLUMBUS-NEWARK ROAD, RIGHT ONTO REYNOLDSBURG – NEW ALBANY ROAD, LEFT ONTO TAYLOR ROAD, RIGHT ONTO HELMBRIGHT DRIVE, LEFT ONTO CAROWAY BOULEVARD, RIGHT ONTO FLEETRUN AVENUE, CONTINUE ONTO LANDOVER ROAD, RIGHT ONTO MEADOW GREEN CIR, ARRIVE AT SITE ON THE RIGHT.

ENGINEERING

2011 OHIO BUILDING CODE OR LATEST EDITION
2014 NATIONAL ELECTRIC CODE
TIA-222-G OR LATEST EDITION

DRAWING INDEX

SHEET NO:	SHEET TITLE
TITLE PAGE	TITLE PAGE
T-1	ELEVATION
T-2	ANTENNA & CABLE CONFIGURATION
T-3	LTE 3C SCHEMATIC
T-4	EQUIPMENT DETAILS
T-5	STRUCTURAL NOTES
T-6	EQUIPMENT NOTES
–	–
E-1	LTE 3C DC CIRCUIT DIAGRAM
E-2	ANTENNA GROUNDING PLAN
E-3	ELECTRICAL SECTION NOTES
–	–
N-1	GENERAL NOTES
N-2	GENERAL NOTES

11"x17" PLOT WILL BE HALF SCALE UNLESS OTHERWISE NOTED

CONTRACTOR SHALL VERIFY ALL PLANS & EXISTING DIMENSIONS & CONDITIONS ON THE JOB SITE & SHALL IMMEDIATELY NOTIFY THE ENGINEER IN WRITING OF ANY DISCREPANCIES BEFORE PROCEEDING WITH THE WORK OR BE RESPONSIBLE FOR SAME

UNDERGROUND SERVICE ALERT
OHIO UTILITY PROTECTION SERVICE
1.800.362.2764
811

3 WORKING DAYS UTILITY NOTIFICATION PRIOR TO CONSTRUCTION

-THESE PLANS ADHERE TO ALL OF THE REQUIREMENTS CALLED OUT IN THE JURISDICTION PLANNING AND ZONING FOR ANTENNAS AND SUPPORT STRUCTURES WHERE SITE IS LOCATED.
-SUBCONTRACTOR SHALL VERIFY ALL PLANS AND EXISTING CONDITIONS ON SITE. IMMEDIATELY NOTIFY ENGINEER OF ANY DISCREPANCIES PRIOR TO PERFORMING ANY WORK OR BE RESPONSIBLE FOR THE SAME

APPLICANT/OWNER:

AT&T MOBILITY

8372 EAST BROAD ST.
REYNOLDSBURG, OH 43068

PREPARED BY:

BLACK & VEATCH

6800 W. 115TH ST, SUITE 2292
OVERLAND PARK, KANSAS 66211
(913) 458-2000

PROJECT NUMBER: 129021

STATE OF OHIO
PING JIANG
72759
REGISTERED
PROFESSIONAL ENGINEER
02/17/2016

IT IS A VIOLATION OF LAW FOR ANY PERSON, UNLESS THEY ARE ACTING UNDER THE DIRECTION OF A LICENSED PROFESSIONAL ENGINEER, TO ALTER THIS DOCUMENT.

LANDLORD/PROPERTY OWNER SIGNATURE

RECEIVED
APR 11 2016

REV	DATE	DESCRIPTION
0	02.17.16	ISSUED FOR CONSTRUCTION

PROJECT LOCATION: USID (59304)

GAHANNA HIGH SCHOOL

511 HAVENS CORNERS ROAD
GAHANNA, OH 43230

DRAWING DESCRIPTION:

TITLE PAGE

DRAWING NUMBER:

TITLE PAGE

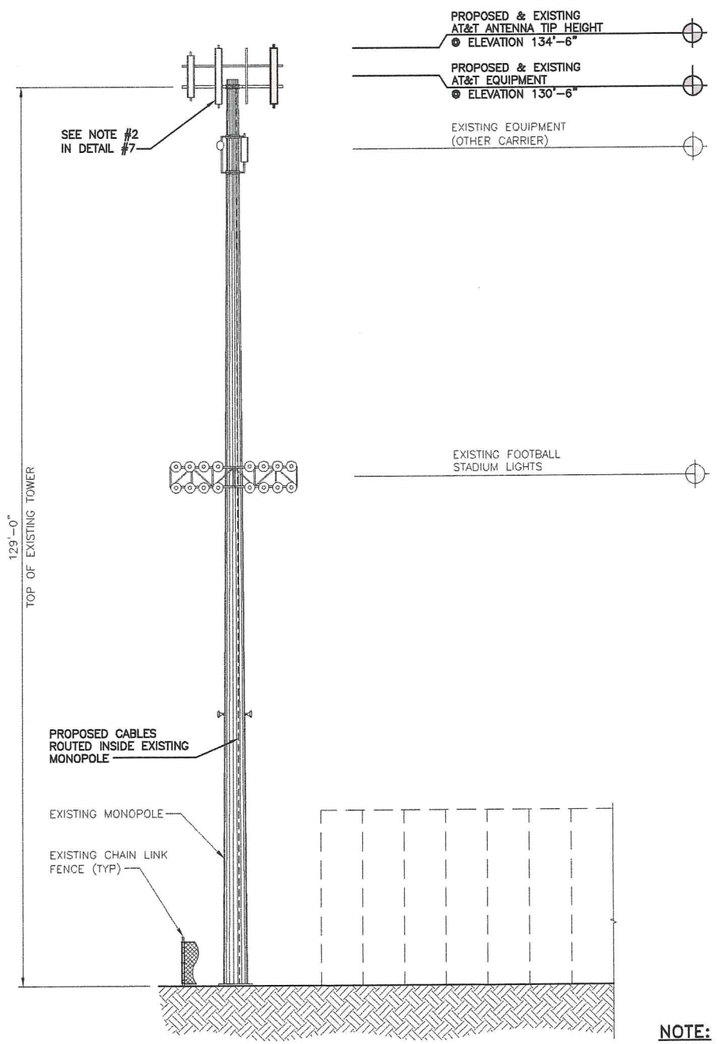

NOTE:
GROUND EQUIPMENT AND/OR EQUIPMENT SHELTERS OMITTED FOR CLARITY.

FINAL TOWER ELEVATION

12' 8' 4' 0 10' 20'
3/32"=1'-0"

1

NOT USED

NO SCALE

2

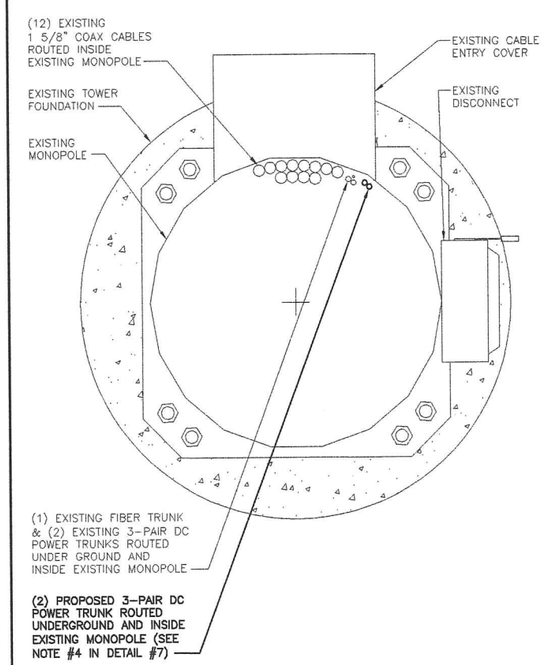

FINAL CABLE ROUTING PLAN

NO SCALE

3

THESE DRAWINGS HAVE BEEN CREATED BASED ON THE ASSUMPTION THAT THE STRUCTURE HAS SUFFICIENT CAPACITY TO SUPPORT THE PROPOSED LOADING. IT IS THE RESPONSIBILITY OF THE TOWER OWNER AND/OR ENGINEER TO CONFIRM THAT THE PROPOSED LOADING IS WITHIN THE ORIGINAL DESIGN CAPACITY OF THE STRUCTURE.

STRUCTURAL ANALYSIS NOTE

4

THE EXISTING MOUNTS WERE PREVIOUSLY ANALYZED WITH THE PROPOSED 3C LOADING CONSIDERED IN THE ANALYSIS. MOUNT REPLACEMENT WITH VALMONT/SITE PRO 1 RMQLP (14'-6") LOW PROFILE PLATFORM WITH VALMONT/SITE PRO 1 HRK 14 HANDRAIL KIT (SEE BLACK & VEATCH ANTENNA MOUNT EVALUATION LETTER DATED OCTOBER 10, 2014) WAS RECOMMENDED AS A RESULT. THE REPLACEMENT HAS BEEN VERIFIED BY BLACK & VEATCH. LTE 3C BUILD SHALL PROCEED AS SCHEDULE.

MOUNT ANALYSIS NOTE

5

INSTALL:
(3) PROPOSED LTE ANTENNAS
(3) PROPOSED RRH'S
(2) PROPOSED 3-PAIR DC POWER TRUNKS
(1) PROPOSED DC6 SURGE PROTECTION UNIT

REMOVE:
(3) EXISTING ANTENNAS

SCOPE OF WORK

6

1. WHEN STACKING CABLES 3 OR MORE DEEP, USE STACKABLE SNAP-INS, TALLEY PART NUMBER SSH-158-3 (OR ENGINEER APPROVED EQUAL).
2. CONSTRUCTION TO CENTER THE ANTENNAS ON THE MOUNT AS SHOWN IN THE ELEVATION.
3. ANY ADDITIONAL EQUIPMENT NOTED ON THE STRUCTURAL ANALYSIS SHOULD BE CONSIDERED AS RESERVED LOADING, WHICH COULD BE INSTALLED AT A FUTURE DATE.
4. CONTRACTOR SHALL DEFAULT TO THE CABLE PLACEMENT PER THE LATEST STRUCTURAL ANALYSIS.

NOTES

7

APPLICANT/OWNER:

AT&T MOBILITY

8372 EAST BROAD ST.
REYNOLDSBURG, OH 43068

PREPARED BY:

BLACK & VEATCH

6800 W. 115TH ST, SUITE 2292
OVERLAND PARK, KANSAS 66211
(913) 458-2000

PROJECT NUMBER: 129021

STATE OF OHIO
PING JIANG
72759
REGISTERED
PROFESSIONAL ENGINEER

02/17/2016

IT IS A VIOLATION OF LAW FOR ANY PERSON, UNLESS THEY ARE ACTING UNDER THE DIRECTION OF A LICENSED PROFESSIONAL ENGINEER, TO ALTER THIS DOCUMENT.

LANDLORD/PROPERTY OWNER SIGNATURE

REV	DATE	DESCRIPTION
0	02.17.16	ISSUED FOR CONSTRUCTION

PROJECT LOCATION: USID (59304)

GAHANNA HIGH SCHOOL

511 HAVENS CORNERS ROAD
GAHANNA, OH 43230

DRAWING DESCRIPTION:

ELEVATION

DRAWING NUMBER:

T-1

Antenna Requirements						Proposed LTE Transmission Cables																	
Sector	Final Antenna Configuration		Antenna Azimuth	Number of RRH's		From DC Surge to DC6-48-60-0-8F (DC Power)			From DC6-48-60-0-8F to RRH (DC Power)			From LTE BBU to DC6-48-60-18-8F (Fiber)			From DC6-48-60-18-8F to RRH (Fiber)			From RRH to Antenna			RET Cables		
	Technology	Antenna	Final	Exist.	Final	Part #	Qty	≈ Length	Part #	Qty	≈ Length	Part #	Qty	≈ Length	Part #	Qty	≈ Length	Part #	Qty	≈ Length	Part #	Qty	≈ Length
A1	UMTS/LTE 3C	Prop.	Match Exist.	-	1	WR-VG86T	2	230'	WR-VG122ST-BRDA	1	15'	-	-	-	FB-L98B-035-5000	1	16'	LDF4	4	5'	840-10-408	1	6.6'
A2	-	-	-	-	-	-	-	-	-	-	-	-	-	-	-	-	-	-	-	-	-	-	-
A3	LTE 1C/2C	Exist.	-	2	2	-	-	-	-	-	-	-	-	-	-	-	-	-	-	-	-	-	-
A4	UMTS	Exist.	-	-	-	-	-	-	-	-	-	-	-	-	-	-	-	-	-	-	-	-	-
B1	UMTS/LTE 3C	Prop.	Match Exist.	-	1	-	-	-	WR-VG122ST-BRDA	1	15'	-	-	-	FB-L98B-035-5000	1	16'	LDF4	4	5'	840-10-408	1	6.6'
B2	-	-	-	-	-	-	-	-	-	-	-	-	-	-	-	-	-	-	-	-	-	-	-
B3	LTE 1C/2C	Exist.	-	2	2	-	-	-	-	-	-	-	-	-	-	-	-	-	-	-	-	-	-
B4	UMTS	Exist.	-	-	-	-	-	-	-	-	-	-	-	-	-	-	-	-	-	-	-	-	-
G1	UMTS/LTE 3C	Prop.	Match Exist.	-	1	-	-	-	WR-VG122ST-BRDA	1	15'	-	-	-	FB-L98B-035-5000	1	16'	LDF4	4	5'	840-10-408	1	6.6'
G2	-	-	-	-	-	-	-	-	-	-	-	-	-	-	-	-	-	-	-	-	-	-	-
G3	LTE 1C/2C	Exist.	-	2	2	-	-	-	-	-	-	-	-	-	-	-	-	-	-	-	-	-	-
G4	UMTS	Exist.	-	-	-	-	-	-	-	-	-	-	-	-	-	-	-	-	-	-	-	-	-

PART NUMBERS PROVIDED ARE FOR ROSENBERGER SITE SOLUTIONS

*EACH (18) PAIR FIBER TRUNK CABLE TRANSMITS SIGNAL FOR UP TO (18) RRH'S

**EACH (6) CONDUCTOR (3 PAIR) POWER CABLE SUPPLIES POWER FOR UP TO (3) RRH'S

FINAL ANTENNA SCHEDULE & CABLE ROUTING PLAN

1

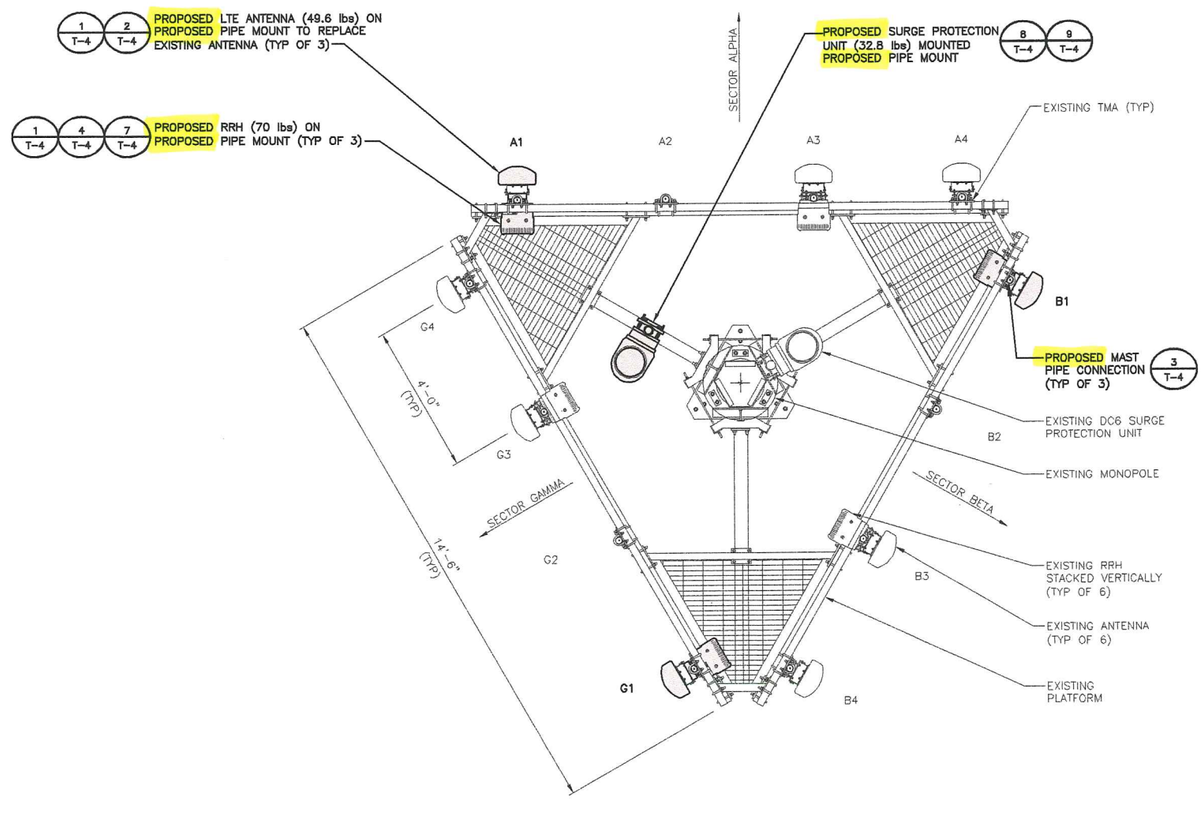

FINAL ANTENNA PLAN

12" 6" 0 1' 2' 3' 4' 5'
1/2"=1'-0"

2

THE EXISTING MOUNTS WERE PREVIOUSLY ANALYZED WITH THE PROPOSED 3C LOADING CONSIDERED IN THE ANALYSIS. MOUNT REPLACEMENT WITH VALMONT/SITE PRO 1 RMQLP (14'-6") LOW PROFILE PLATFORM WITH VALMONT/SITE PRO 1 HRK 14 HANDRAIL KIT (SEE BLACK & VEATCH ANTENNA MOUNT EVALUATION LETTER DATED OCTOBER 10, 2014) WAS RECOMMENDED AS A RESULT. THE REPLACEMENT HAS BEEN VERIFIED BY BLACK & VEATCH. LTE 3C BUILD SHALL PROCEED AS SCHEDULE.

MOUNT ANALYSIS NOTE

3

1. CONTRACTOR SHALL REFER TO THE LATEST RFDS PRIOR TO THE CONSTRUCTION COMMENCING.
2. BLACK AND VEATCH RECOMMENDS EQUAL HORIZONTAL SPACING OF ANTENNAS TO ENSURE ADEQUATE WEIGHT DISTRIBUTION.
3. ANY ADDITIONAL EQUIPMENT NOTED ON THE STRUCTURAL ANALYSIS SHOULD BE CONSIDERED AS RESERVED LOADING, WHICH COULD BE INSTALLED AT A FUTURE DATE.

NOTES

4

APPLICANT/OWNER:

AT&T MOBILITY

8372 EAST BROAD ST.
REYNOLDSBURG, OH 43068

PREPARED BY:

BLACK & VEATCH

6800 W. 115TH ST, SUITE 2292
OVERLAND PARK, KANSAS 66211
(913) 458-2000

PROJECT NUMBER: 129021

STATE OF OHIO
PING JIANG
72759
REGISTERED
PROFESSIONAL ENGINEER

02/17/2016

IT IS A VIOLATION OF LAW FOR ANY PERSON, UNLESS THEY ARE ACTING UNDER THE DIRECTION OF A LICENSED PROFESSIONAL ENGINEER, TO ALTER THIS DOCUMENT.

LANDLORD/PROPERTY OWNER SIGNATURE

REV	DATE	DESCRIPTION
0	02.17.16	ISSUED FOR CONSTRUCTION

PROJECT LOCATION: USID (59304)

GAHANNA HIGH SCHOOL

511 HAVENS CORNERS ROAD
GAHANNA, OH 43230

DRAWING DESCRIPTION:

ANTENNA & CABLE CONFIGURATION

DRAWING NUMBER:

T-2

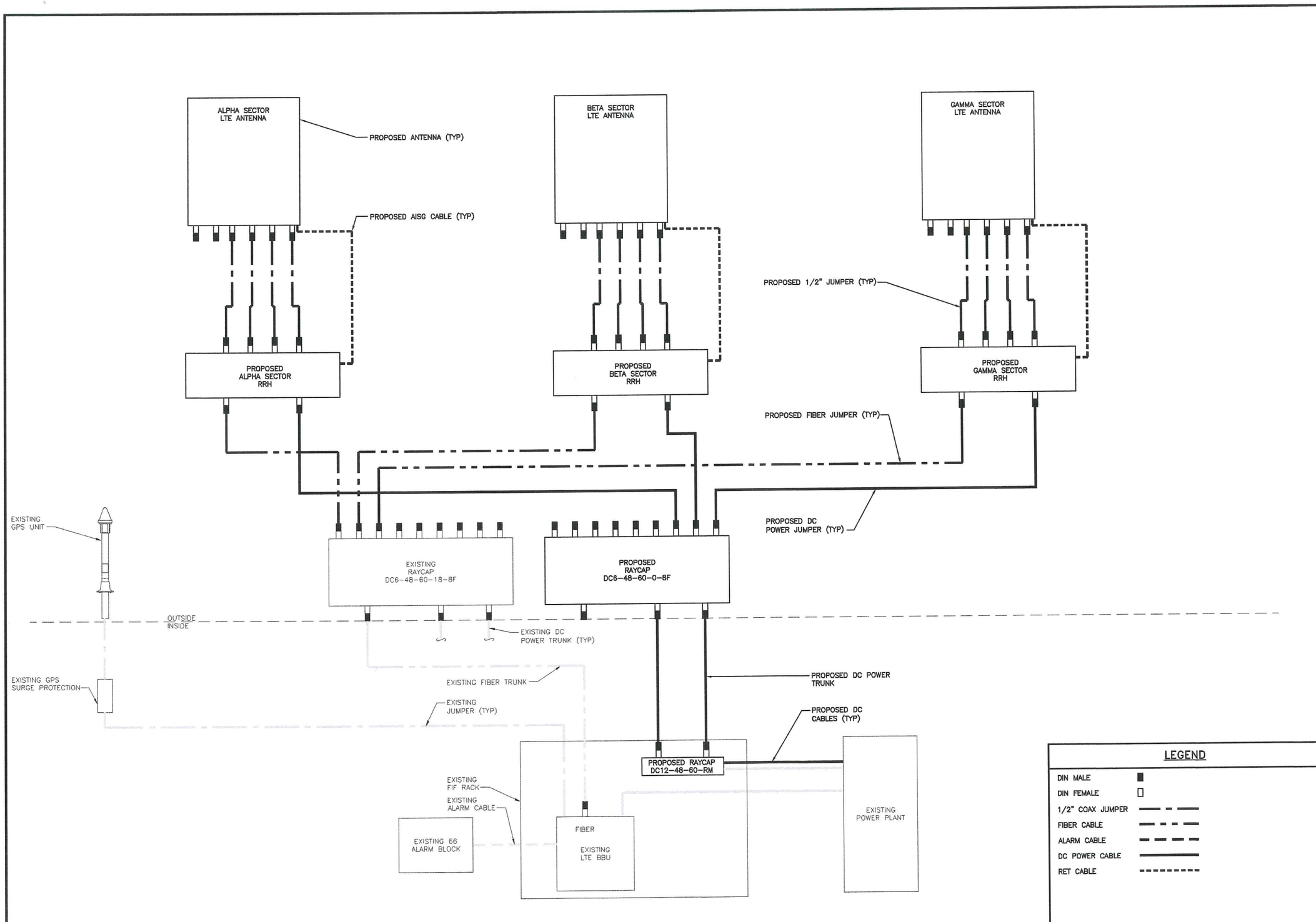

LTE 3C SCHEMATIC

APPLICANT/OWNER:

AT&T MOBILITY

8372 EAST BROAD ST.
REYNOLDSBURG, OH 43068

PREPARED BY:

BLACK & VEATCH

6800 W. 115TH ST, SUITE 2292
OVERLAND PARK, KANSAS 66211
(913) 458-2000

PROJECT NUMBER: 129021

STATE OF OHIO
PING JIANG
72759
REGISTERED PROFESSIONAL ENGINEER
02/17/2016

IT IS A VIOLATION OF LAW FOR ANY PERSON, UNLESS THEY ARE ACTING UNDER THE DIRECTION OF A LICENSED PROFESSIONAL ENGINEER, TO ALTER THIS DOCUMENT.

LANDLORD/PROPERTY OWNER SIGNATURE

REV	DATE	DESCRIPTION
0	02.17.16	ISSUED FOR CONSTRUCTION

PROJECT LOCATION: USID (59304)

GAHANNA HIGH SCHOOL

511 HAVENS CORNERS ROAD
GAHANNA, OH 43230

DRAWING DESCRIPTION:

LTE 3C SCHEMATIC

DRAWING NUMBER:

T-3

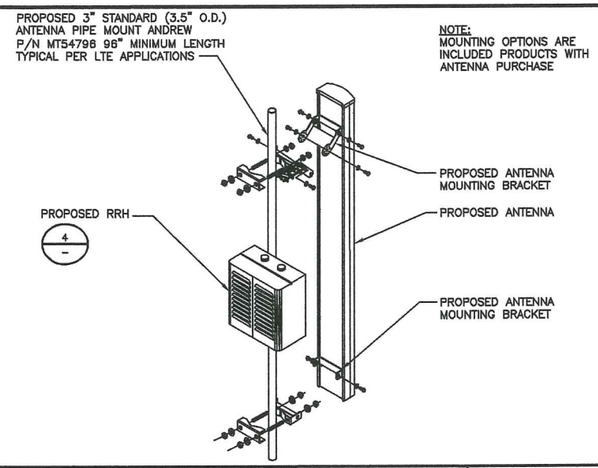

ANTENNA MOUNTING WITH RRH DETAIL | NO SCALE | 1

ANDREW ANTENNA SBNHH-1D65C

RADOME MATERIAL:	FIBERGLASS, UV RESISTANT
RADOME COLOR:	LIGHT GRAY
DIMENSIONS, HxWxD:	2449x301x181mm (96.4"x11.9"x7.1")
WEIGHT, WITH PRE-MOUNTED BRACKETS:	49.6 lbs
WIND LOAD:	879.0 N @ 150km/h 197.6 lbf @ 150km/h
CONNECTOR:	7/16 DIN FEMALE

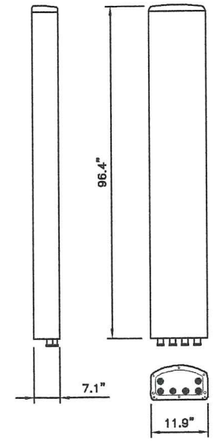

PROPOSED LTE ANTENNA SPECIFICATIONS | NO SCALE | 2

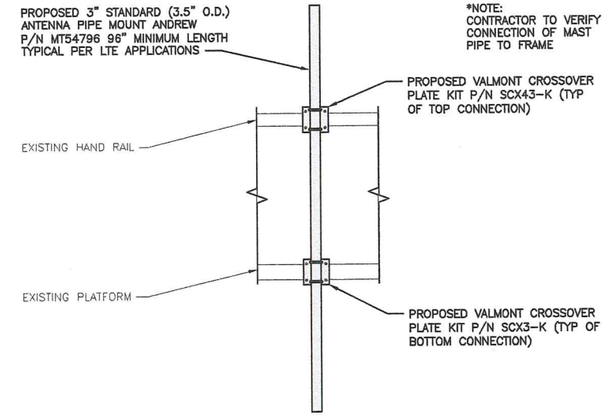

MAST PIPE CONNECTION DETAIL | NO SCALE | 3

ALCATEL-LUCENT RRH4x25-WCS

DIMENSIONS, WxDxH:	(12"x8.7"x31.5") 305x220x800mm
WEIGHT, WITHOUT MOUNTING KIT:	70 lbs
POWER SUPPLY:	-48VDC
TEMP. RANGE W/OUT SOLAR LOAD:	(-40°F TO +131°F) +40°C TO +55°C

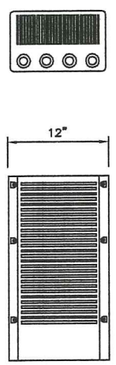

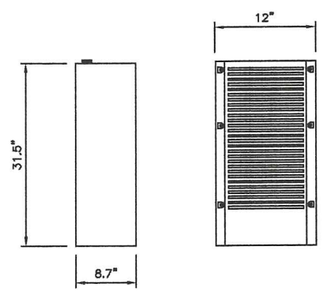

LTE RRH SPECIFICATIONS (WCS MHz) | NO SCALE | 4

NOT USED | NO SCALE | 5

NOT USED | NO SCALE | 6

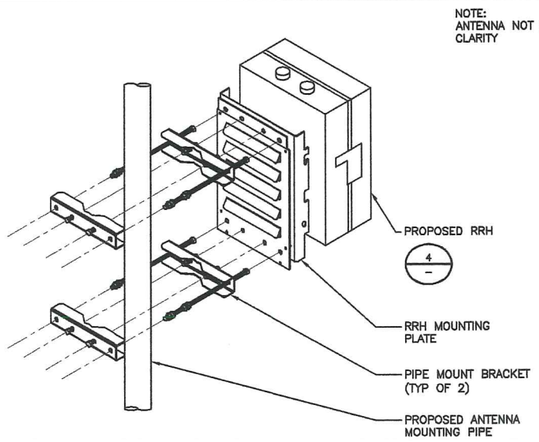

RRH ANTENNA PIPE MOUNT DETAIL | NO SCALE | 7

RAYCAP DC6-48-60-0-8F

DIMENSIONS, WxDxH:	280x470x794mm (11"x18.5"x31.25")
NOMINAL OPERATING VOLTAGE:	48 VDC
NOMINAL DISCHARGE CURRENT:	20 kA 8/20µs
MAXIMUM DISCHARGE CURRENT:	60 kA 8/20µs
MAXIMUM CONTINUOUS OPERATING VOLTAGE:	75 VDC
VOLTAGE PROTECTION RATING:	400 V
WIND LOADING:	150 MPH SUSTAINED (105.7 lbs) 195 MPH GUST (213.6 lbs)
TOTAL WEIGHT:	32.8 lbs

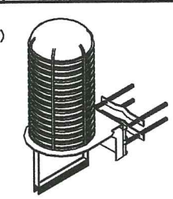

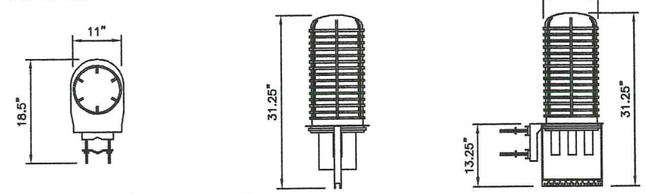

CONTRACTOR TO USE "THREAD LUBRICANT" ON MOUNTING BOLTS DURING INSTALLATION

DC6 SURGE PROTECTION SPECIFICATIONS | NO SCALE | 8

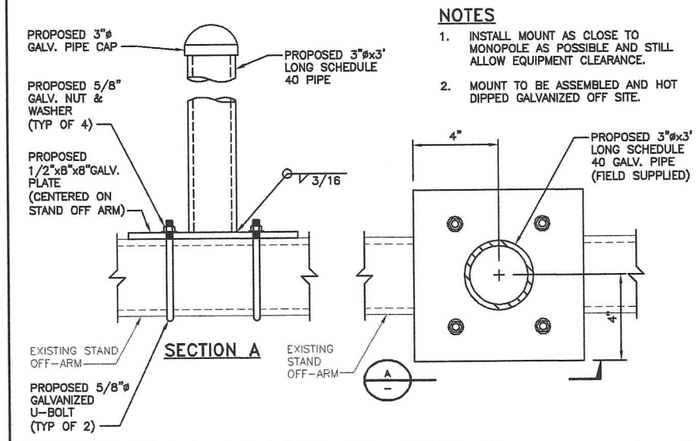

NOTES

1. INSTALL MOUNT AS CLOSE TO MONOPOLE AS POSSIBLE AND STILL ALLOW EQUIPMENT CLEARANCE.
2. MOUNT TO BE ASSEMBLED AND HOT DIPPED GALVANIZED OFF SITE.

PIPE MOUNTING ON STAND-OFF ARM DETAIL | NO SCALE | 9

APPLICANT/OWNER:

AT&T MOBILITY

8372 EAST BROAD ST.
REYNOLDSBURG, OH 43068

PREPARED BY:

BLACK & VEATCH

6800 W. 115TH ST, SUITE 2292
OVERLAND PARK, KANSAS 66211
(913) 458-2000

PROJECT NUMBER: 129021

STATE OF OHIO
PING JIANG
72759
REGISTERED PROFESSIONAL ENGINEER
02/17/2016

IT IS A VIOLATION OF LAW FOR ANY PERSON, UNLESS THEY ARE ACTING UNDER THE DIRECTION OF A LICENSED PROFESSIONAL ENGINEER, TO ALTER THIS DOCUMENT.

LANDLORD/PROPERTY OWNER SIGNATURE

REV	DATE	DESCRIPTION
0	02.17.16	ISSUED FOR CONSTRUCTION

PROJECT LOCATION: USID (59304)

GAHANNA HIGH SCHOOL

511 HAVENS CORNERS ROAD
GAHANNA, OH 43230

DRAWING DESCRIPTION:

EQUIPMENT DETAILS

DRAWING NUMBER:

T-4

PART 1 – GENERAL

1.1 SCOPE:

A. PROVIDE FABRICATION AND ERECTION OF STRUCTURAL STEEL AND OTHER ITEMS AS SHOWN ON THE DRAWINGS OR REQUIRED BY OTHER SECTIONS OF THESE SPECIFICATIONS.

1.2 REFERENCES:

A. AMERICAN INSTITUTE OF STEEL CONSTRUCTION (AISC). MANUAL OF STEEL CONSTRUCTION (13TH EDITION), ALLOWABLE STRESS DESIGN (ASD).

B. AMERICAN SOCIETY FOR TESTING AND MATERIALS (ASTM).
ASTM A36: STRUCTURAL STEEL
ASTM A53: PIPE, STEEL BLACK AND HOT DIPPED, ZINC–COATED WELDED AND SEAMLESS.
ASTM A108: STEEL BARS, CARBON, COLD FINISHED, STANDARD QUALITY.
ASTM A123: ZINC (HOT–DIPPED GALVANIZED) COATING ON IRON AND STEEL PRODUCTS.
ASTM A307: CARBON STEEL BOLTS AND STUDS, 60,000 PSI TENSILE STRENGTH.
ASTM A325: HIGH–STRENGTH BOLT FOR STRUCTURAL STEEL JOINTS.
ASTM A490: HEAT–TREATED, STRUCTURAL STEEL BOLTS, 150 (KSI) (1035MPA) TENSILE STRENGTH.
ASTM A500: COLD–FORMED WELDED AND SEAMLESS CARBON STEEL STRUCTURAL TUBING IN ROUNDS AND SHAPES.
ASTM A563: ARCBON AND ALLOY STEEL NUTS.
ASTM B695: COATINGS OF ZINC MECHANICALLY DEPOSITED ON IRON AND STEEL.
ASTM F436: HARDENED STEEL WASHERS.
ASTM F959: COMPRESSIBLE–WASHER–TYPE DIRECT TENSION INDICATOR FOR USE WITH STRUCTURAL FASTENERS.

C. AMERICAN WELDING SOCIETY (AWS):
AWS A5.1: COVERED CARBON STEEL ARC WELDING ELECTRODES.
AWS A5.5: LOW ALLOY STEEL COVERED ARC WELDING ELECTRODES.
AWS D1.1: STRUCTURAL WELDING CODE – STEEL.

D. RESEARCH COUNCIL ON STRUCTURAL CONNECTIONS (RCSC): "SPECIFICATIONS FOR STRUCTURAL JOINTS USING ASTM A325 BOLTS OR ASTM A490 BOLTS" AS ENDORSED BY AISC.

E. STEEL STRUCTURES PAINTING COUNCIL (SSPC):
SSPC–SP3: POWER TOOL CLEANING.
SSPC–PAINT 11: RED IRON OXIDE, ZINC CHROME, RAW LINSEED OIL OR ALKYD PAINT.

1.3 SUBMITTALS:

A. SUBMIT THE FOLLOWING FOR APPROVAL:

1. FABRICATION AND ERECTION DRAWINGS SHOWING ALL DETAILS, CONNECTIONS, MATERIAL DESIGNATIONS, AND ALL TOP STEEL ELEVATIONS.

B. WELDERS SHALL BE QUALIFIED AS PRESCRIBED IN AWS D1.1.

PART 2 – PRODUCTS

2.1 STRUCTURAL STEEL:

A. SHAPES, PLATES AND BARS SHALL CONFORM TO ASTM A36 AND ASTM A992.

B. STRUCTURAL TUBING SHALL CONFORM TO ASTM A500, GRADE B. STEEL PIPE SHALL CONFORM TO ASTM A53, TYPE E OR S, GRADE B.

2.2 ANCHOR BOLTS:

A. ANCHOR BOLTS SHALL CONFORM TO ASTM A307 WITH HEAVY HEXAGONAL NUTS.

2.3 BOLTS:

A. COMMON (MACHINE) BOLTS SHALL CONFORM TO ASTM A307 GRADE A AND NUTS TO ASTM A563. ONE COMMON BOLT ASSEMBLY SHALL CONSIST OF A BOLT, A HEAVY HEX NUT, AND A HARDENED WASHER.

B. HIGH STRENGTH BOLT SHALL CONFORM TO ASTM A325, ONE HIGH STRENGTH BOLT ASSEMBLY SHALL CONSIST OF A HEAVY HEX STRUCTURAL BOLT, A HEAVY HEX NUT, A HARDENED WASHER CONFIRMING WITH ASTM F436 AND A DIRECT TENSION INDICATOR CONFORMING WITH STM F959. THE HARDENED WASHER SHALL BE INSTALLED AGAINST THE ELEMENT TURNED IN TIGHTENING.UNLESS NOTED OTHERWISE ON THE DRAWINGS, ALL CONNECTIONS SHALL BE BEARING TYPE CONNECTIONS.

2.4 WELDING ELECTRODES:

A. WELDING ELECTRODES SHALL COMPLY WITH AWS D1.1 USING A5.1 OR A5.5 E70XX AND SHALL BE COMPATIBLE WITH THE WELDING PROCESS SELECTED.

2.5 PRIMER:

A. PRIMER SHALL BE RED OXIDE–CHROMATE PRIMER COMPLYING WITH SSPC PAINT SPECIFICATION NO. 11.

PART 3 – EXECUTION

3.1 FABRICATION:

A. SHOP FABRICATE AND ASSEMBLY MATERIALS AS SPECIFIED HEREIN.

1. FABRICATE ITEMS OF STRUCTURAL STEEL IN ACCORDANCE WITH THE AISC–ASD SPECIFICATION, AND AS INDICATED ON THE APPROVED SHOP DRAWINGS.

2. ALL EXPOSED STRUCTURAL STEEL SHALL BE HOT DIP GALVANIZED PER ASTM.

3. PROPERLY MARK AND MATCH–MARK MATERIALS FOR FIELD ASSEMBLY AND FOR IDENTIFICATION AS TO LOCATION FOR WHICH INTENDED.

4. FABRICATE AND DELIVER IN A SEQUENCE WHICH WILL EXPEDITE ERECTION AND MINIMIZE FIELD HANDLING OF MATERIALS.

5. WHERE FINISHING IS REQUIRED, COMPLETE THE ASSEMBLY, INCLUDING THE WELDING OF UNITS, BEFORE START OF FINISHING OPERATIONS.

6. PROVIDE FINISH SURFACE OF MEMBERS EXPOSED IN THE FINAL STRUCTURE FREE FROM MARKINGS, BURNS, AND OTHER DEFECTS.

B. PROVIDE CONNECTIONS AS SPECIFIED HEREIN:

1. PROVIDE BOLTS AND WASHERS OF TYPES AND SIZE REQUIRED FOR COMPLETION OF FIELD ERECTION. USE 3/4 INCH DIAMETER A325 BOLTS UNLESS NOTED OTHERWISE.

2. INSTALL HIGH STRENGTH THREADED FASTENERS IN ACCORDANCE WITH RCSC "SPECIFICATION FOR STRUCTURAL JOINTS USING ASTM A325 OR ASTM A490 BOLTS."

3. WELDED CONSTRUCTION SHALL COMPLY WITH AWS D1.1 FOR PROCEDURES, APPEARANCE, QUALITY OF WELD, AND METHODS USED IN CORRECTING WELDED WORK.

4. THE FABRICATOR SHALL FURNISH AND INSTALL ERECTION CLIPS FOR FIT–UP OF WELDED CONNECTIONS.

5. DOUBLE ANGLE MEMBERS SHALL HAVE WELDED FILLERS SPACED IN ACCORDANCE WITH CHAPTER E4 OF THE AISC–ASD SPECIFICATION.

6. GUSSET AND STIFFENER PLATES SHALL BE 3/8 INCH THICK MINIMUM.

3.2 PRIMING:

A. STRUCTURAL STEEL SHALL BE PRIMED AS SPECIFIED HEREIN, UNLESS SHOWN OTHERWISE ON THE DRAWINGS.

B. STRUCTURAL STEEL SURFACE PREPARATION SHALL CONFORM TO SSPC–SP3, "POWER TOOL CLEANING."

C. SURFACE PREPARATION AND PRIMER SHALL BE IN ACCORDANCE WITH AISC CODE OF STANDARD PRACTICE AS INCLUDED IN THE ASD MANUAL OF STEEL CONSTRUCTION.

D. MATERIALS SHALL REMAIN CLOSED UNTIL REQUIRED FOR USE, MANUFACTURER'S POT–LIFE REQUIREMENTS SHALL BE STRICTLY ADHERED TO.

E. PRIMER SHALL BE APPLIED TO DRY, CLEAN, PREPARED SURFACE AND UNDER FAVORABLE CONDITIONS IN ACCORDANCE WITH MANUFACTURER'S INSTRUCTIONS. UNLESS OTHERWISE RECOMMENDED BY THE MANUFACTURER PRIMING SHALL NOT BE DONE WHEN AMBIENT TEMPERATURE IS LESS THAN 50 DEGREE F, THE RELATIVE HUMIDITY IS MORE THAN 90 PERCENT, OR THE SURFACE TEMPERATURE IS LESS THAN 5 DEGREE F ABOVE THE DEW POINT.

F. GENERALLY ALL PRIMER SHALL BE SPRAY APPLIED. BRUSH OR ROLLER APPLICATION SHALL BE RESTRICTED TO TOUCHUP AND TO AREAS NOT ACCESSIBLE BY SPRAY GUN.

G. PRIMER SHALL BE UNIFORMLY APPLIED WITHOUT RUNS, SAGS, SOLVENT BLISTERS, DRY SPRAY OR OTHER BLEMISHES. ALL BLEMISHES AND OTHER IRREGULARITIES SHALL BE REPAIRED OR REMOVED AND THE AREA RE–COATED. SPECIAL ATTENTION SHALL BE PAID TO CREVICES, WELD LINES, BOLT HEADS, CORNERS, EDGES, ETC., TO OBTAIN THE REQUIRED NOMINAL FILM THICKNESS.

H. THE DRY FILM THICKNESS OF THE PRIMER SHALL BE 2.0 MILS.

I. IF THE PRIMER IS DAMAGED BY WELDING OR PHYSICAL ABUSE, THE AREA SHALL BE TOUCHED–UP AND REPAIRED. THE TOUCHUP PAINT SHALL BE COMPATIBLE WITH THE APPLIED PRIMER WITH MINIMUM DRY FILM THICKNESS OF 1.5 MILS.

3.3 INSTALLATION:

A. INSTALLATION OF STRUCTURAL STEEL SHALL COMPLY WITH AISC "CODE OF STANDARD PRACTICE."

B. STRUCTURAL FIELD WELDING SHALL BE DONE BY THE ELECTRIC SUBMERGED OR SHIELDED METAL ARC PROCESS. WELDED CONSTRUCTION SHALL COMPLY WITH AWS D1.1.

C. PROVIDE ANCHOR BOLTS AND OTHER CONNECTORS REQUIRED FOR SECURING STRUCTURAL STEEL TO ELEVATOR SHAFT WALLS AND OTHER IN–PLACE WORK. PROVIDE TEMPLATES AND OTHER DEVICES NECESSARY FOR PRESETTING BOLTS AND ANCHORS TO ACCURATE LOCATIONS.

D. SPLICE MEMBERS ONLY WHERE INDICATED ON THE DRAWINGS.

E. ANY GAS CUTTING TORCHES HAVE TO BE APPROVED IN WRITING BY THE PROJECT STRUCTURAL ENGINEER.

F. PROVIDE TEMPORARY SHORING BRACING WITH CONNECTIONS OF SUFFICIENT STRENGTH TO BEAR IMPOSED LOADS. REMOVE TEMPORARY CONNECTIONS AND MEMBERS WHEN PERMANENT MEMBERS ARE IN PLACE AND THE FINAL CONNECTIONS HAVE BEEN MADE.

G. ALIGN AND ADJUST MEMBERS, AND OTHER SURFACES WHICH WILL BE IN PERMANENT CONTACT, BEFORE ASSEMBLY.

H. HIGH–STRENGTH BOLTS, AT A MINIMUM, SHALL BE TIGHTENED TO A "SNUG TIGHT" CONDITION AS DEFINED IN THE LATEST AISC SPECIFICATION. ALL HIGH–STRENGTH BOLTS SPECIFIED ON THE DESIGN DRAWINGS TO BE USED IN PRETENSIONED OR SLIP–CRITICAL JOINTS SHALL BE TIGHTENED TO A BOLT TENSION NOT LESS THAN THAT GIVEN IN AISC TABLE J3.1. INSTALLATION SHALL BE BY ANY OF THE FOLLOWING METHODS: TURN–OF NUT METHOD, A DIRECT–TENSION–INDICATOR, TWIST–OFF–TYPE TENSION–CONTROL BOLT, CALIBRATED WRENCH, OR ALTERNATIVE DESIGN BOLT.

APPLICANT/OWNER:

AT&T MOBILITY

8372 EAST BROAD ST.
REYNOLDSBURG, OH 43068

PREPARED BY:

BLACK & VEATCH

6800 W. 115TH ST, SUITE 2292
OVERLAND PARK, KANSAS 66211
(913) 458–2000

PROJECT NUMBER: 129021

STATE OF OHIO
PING JIANG
72759
REGISTERED
PROFESSIONAL ENGINEER
02/17/2016

IT IS A VIOLATION OF LAW FOR ANY PERSON, UNLESS THEY ARE ACTING UNDER THE DIRECTION OF A LICENSED PROFESSIONAL ENGINEER, TO ALTER THIS DOCUMENT.

LANDLORD/PROPERTY OWNER SIGNATURE

REV	DATE	DESCRIPTION
0	02.17.16	ISSUED FOR CONSTRUCTION

PROJECT LOCATION: USID (59304)

GAHANNA HIGH SCHOOL

511 HAVENS CORNERS ROAD
GAHANNA, OH 43230

DRAWING DESCRIPTION:

STRUCTURAL NOTES

DRAWING NUMBER:

T-5

ANTENNA MOUNTING

1. DESIGN AND CONSTRUCTION OF ANTENNA SUPPORTS SHALL CONFORM TO CURRENT ANSI/TIA-222 OR APPLICABLE LOCAL CODES.
2. ALL STEEL MATERIALS SHALL BE GALVANIZED AFTER FABRICATION IN ACCORDANCE WITH ASTM A123 "ZINC (HOT-DIP GALVANIZED) COATINGS ON IRON AND STEEL PRODUCTS", UNLESS NOTED OTHERWISE.
3. ALL BOLTS, ANCHORS AND MISCELLANEOUS HARDWARE SHALL BE GALVANIZED IN ACCORDANCE WITH ASTM A153 "ZINC-COATING (HOT-DIP) ON IRON AND STEEL HARDWARE", UNLESS NOTED OTHERWISE.
4. DAMAGED GALVANIZED SURFACES SHALL BE REPAIRED BY COLD GALVANIZING IN ACCORDANCE WITH ASTM A780.
5. ALL ANTENNA MOUNTS SHALL BE INSTALLED WITH LOCK NUTS, DOUBLE NUTS AND SHALL BE TORQUED TO MANUFACTURER'S RECOMMENDATIONS.
6. CONTRACTOR SHALL INSTALL ANTENNA PER MANUFACTURER'S RECOMMENDATION FOR INSTALLATION AND GROUNDING.
7. ALL UNUSED PORTS ON ANY ANTENNAS SHALL BE TERMINATED WITH A 50-OHM LOAD TO ENSURE ANTENNAS PERFORM AS DESIGNED.
8. PRIOR TO SETTING ANTENNA AZIMUTHS AND DOWNTILTS, ANTENNA CONTRACTOR SHALL CHECK THE ANTENNA MOUNT FOR TIGHTNESS AND ENSURE THAT THEY ARE PLUMB. ANTENNA AZIMUTHS SHALL BE SET FROM TRUE NORTH AND BE ORIENTED WITHIN +/- 5% AS DEFINED BY THE RFDS. ANTENNA DOWNTILTS SHALL BE WITHIN +/- 0.5% AS DEFINED BY THE RFDS. REFER TO ND-00246.
9. JUMPERS FROM THE TMA'S MUST TERMINATE TO OPPOSITE POLARIZATIONS IN EACH SECTOR.
10. CONTRACTOR SHALL RECORD THE SERIAL #, SECTOR, AND POSITION OF EACH ACTUATOR INSTALLED AT THE ANTENNAS AND PROVIDE THE INFORMATION TO AT&T.
11. TMA'S SHALL BE MOUNTED ON PIPE DIRECTLY BEHIND ANTENNAS AS CLOSE TO ANTENNA AS FEASIBLE IN A VERTICAL POSITION.

TORQUE REQUIREMENTS

12. ALL RF CONNECTIONS SHALL BE TIGHTENED BY A TORQUE WRENCH.
13. ALL RF CONNECTIONS, GROUNDING HARDWARE AND ANTENNA HARDWARE SHALL HAVE A TORQUE MARK INSTALLED IN A CONTINUOUS STRAIGHT LINE FROM BOTH SIDES OF THE CONNECTION.
    A. RF CONNECTION BOTH SIDES OF THE CONNECTOR.
    B. GROUNDING AND ANTENNA HARDWARE ON THE NUT SIDE STARTING FROM THE THREADS TO THE SOLID SURFACE. EXAMPLE OF SOLID SURFACE: GROUND BAR, ANTENNA BRACKET METAL.
    C. ALL 8M ANTENNA HARDWARE SHALL BE TIGHTENED TO 9 LB-FT (12 NM).
14. ALL 12M ANTENNA HARDWARE SHALL BE TIGHTENED TO 43 LB-FT (58 NM).
15. ALL GROUNDING HARDWARE SHALL BE TIGHTENED UNTIL THE LOCK WASHER COLLAPSES AND THE GROUNDING HARDWARE IS NO LONGER LOOSE.
16. ALL DIN TYPE CONNECTIONS SHALL BE TIGHTENED TO 18-22 LB-FT (24.4 – 29.8 NM).
17. ALL N TYPE CONNECTIONS SHALL BE TIGHTENED TO 15-20 LB-IN (1.7 – 2.3 NM).

FIBER & POWER CABLE MOUNTING

18. THE FIBER OPTIC TRUNK CABLES SHALL BE INSTALLED INTO CONDUITS, CHANNEL CABLE TRAYS, OR CABLE TRAY. WHEN INSTALLING FIBER OPTIC TRUNK CABLES INTO A CABLE TRAY SYSTEM, THEY SHALL BE INSTALLED INTO AN INTER DUCT AND A PARTITION BARRIER SHALL BE INSTALLED BETWEEN THE 600 VOLT CABLES AND THE INTER DUCT IN ORDER TO SEGREGATE CABLE TYPES. OPTIC FIBER TRUNK CABLES SHALL HAVE APPROVED CABLE RESTRAINTS EVERY (60) SIXTY FEET AND SECURELY FASTENED TO THE CABLE TRAY SYSTEM. NFPA 70 (NEC) ARTICLE 770 RULES SHALL APPLY.
19. THE TYPE TC-ER CABLES SHALL BE INSTALLED INTO CONDUITS, CHANNEL CABLE TRAYS, OR CABLE TRAY AND SHALL BE SECURED AT INTERVALS NOT EXCEEDING (6) SIX FEET. AN EXCEPTION; WHERE TYPE TC-ER CABLES ARE NOT SUBJECT TO PHYSICAL DAMAGE, CABLES SHALL BE PERMITTED TO MAKE A TRANSITION BETWEEN CONDUITS, CHANNEL CABLE TRAYS, OR CABLE TRAY WHICH ARE SERVING UTILIZATION EQUIPMENT OR DEVICES, A DISTANCE (6) SIX FEET SHALL NOT BE EXCEEDED WITHOUT CONTINUOUS SUPPORTING. NFPA 70 (NEC) ARTICLES 336 AND 392 RULES SHALL APPLY.
20. WHEN INSTALLING OPTIC FIBER TRUNK CABLES OR TYPE TC-ER CABLES INTO CONDUITS, NFPA 70 (NEC) ARTICLE 300 RULES SHALL APPLY.

COAXIAL CABLE NOTES

21. TYPES AND SIZES OF THE ANTENNA CABLE ARE BASED ON ESTIMATED LENGTHS. PRIOR TO ORDERING CABLE, CONTRACTOR SHALL VERIFY ACTUAL LENGTH BASED ON CONSTRUCTION LAYOUT AND NOTIFY THE PROJECT MANAGER IF ACTUAL LENGTHS EXCEED ESTIMATED LENGTHS.
22. CONTRACTOR SHALL VERIFY THE DOWN-TILT OF EACH ANTENNA WITH A DIGITAL LEVEL.
23. CONTRACTOR SHALL CONFIRM COAX COLOR CODING PRIOR TO CONSTRUCTION. REFER TO "ANTENNA SYSTEM LABELING STANDARD" ND-00027 LATEST VERSION.
24. ALL JUMPERS TO THE ANTENNAS FROM THE MAIN TRANSMISSION LINE SHALL BE 1/2" DIA. LDF AND SHALL NOT EXCEED 6'-0".
25. ALL COAXIAL CABLE SHALL BE SECURED TO THE DESIGNED SUPPORT STRUCTURE, IN AN APPROVED MANNER, AT DISTANCES NOT TO EXCEED 4'-0" OC.
26. CONTRACTOR SHALL FOLLOW ALL MANUFACTURER'S RECOMMENDATIONS REGARDING BOTH THE INSTALLATION AND GROUNDING OF ALL COAXIAL CABLES, CONNECTORS, ANTENNAS, AND ALL OTHER EQUIPMENT.
27. CONTRACTOR SHALL WEATHERPROOF ALL ANTENNA CONNECTORS WITH SELF AMALGAMATING TAPE. WEATHERPROOFING SHALL BE COMPLETED IN STRICT ACCORDANCE WITH AT&T STANDARDS.
28. CONTRACTOR SHALL GROUND ALL EQUIPMENT. INCLUDING ANTENNAS, RET MOTORS, TMA'S, COAX CABLES, AND RET CONTROL CABLES AS A COMPLETE SYSTEM. GROUNDING SHALL BE EXECUTED BY QUALIFIED WIREMEN IN COMPLIANCE WITH MANUFACTURER'S SPECIFICATION AND RECOMMENDATION.
29. CONTRACTOR SHALL PROVIDE STRAIN-RELIEF AND CABLE SUPPORTS FOR ALL CABLE ASSEMBLIES, COAX CABLES, AND RET CONTROL CABLES. CABLE STRAIN-RELIEFS AND CABLE SUPPORTS SHALL BE APPROVED FOR THE PURPOSE. INSTALLATION SHALL BE IN ACCORDANCE WITH MANUFACTURER'S SPECIFICATIONS AND RECOMMENDATIONS.
30. CONTRACTOR TO VERIFY THAT EXISTING COAX HANGERS ARE STACKABLE SNAP IN HANGERS. IF EXISTING HANGERS ARE NOT STACKABLE SNAP IN HANGERS THE CONTRACTOR SHALL REPLACE EXISTING HANGERS WITH NEW SNAP IN HANGERS IF APPLICABLE.

GENERAL CABLE AND EQUIPMENT NOTES

31. CONTRACTOR SHALL BE RESPONSIBLE TO VERIFY ANTENNA, TMAS, DIPLEXERS, AND COAX CONFIGURATION, MAKE AND MODELS PRIOR TO INSTALLATION.
32. ALL CONNECTIONS FOR HANGERS, SUPPORTS, BRACING, ETC. SHALL BE INSTALLED PER TOWER MANUFACTURER'S RECOMMENDATIONS.
33. CONTRACTOR SHALL REFERENCE THE TOWER STRUCTURAL ANALYSIS/DESIGN DRAWINGS FOR DIRECTIONS ON CABLE DISTRIBUTION/ROUTING.
34. ALL OUTDOOR RF CONNECTORS/CONNECTIONS SHALL BE WEATHERPROOFED, EXCEPT THE RET CONNECTORS, USING BUTYL TAPE AFTER INSTALLATION AND FINAL CONNECTIONS ARE MADE. BUTYL TAPE SHALL HAVE A MINIMUM OF ONE-HALF TAPE WIDTH OVERLAP ON EACH TURN AND EACH LAYER SHALL BE WRAPPED THREE TIMES. WEATHERPROOFING SHALL BE SMOOTH WITHOUT BUCKLING. BUTYL BLEEDING IS NOT ALLOWED.
35. IF REQUIRED TO PAINT ANTENNAS AND/OR COAX:
    A. TEMPERATURE SHALL BE ABOVE 50° F.
    B. PAINT COLOR MUST BE APPROVED BY BUILDING OWNER/LANDLORD.
    C. FOR REGULATED TOWERS, FAA/FCC APPROVED PAINT IS REQUIRED.
    D. DO NOT PAINT OVER COLOR CODING OR ON EQUIPMENT MODEL NUMBERS.
36. ALL CABLES SHALL BE GROUNDED WITH COAXIAL CABLE GROUND KITS. FOLLOW THE MANUFACTURER'S RECOMMENDATIONS.
    A. GROUNDING AT THE ANTENNA LEVEL.
    B. GROUNDING AT MID LEVEL, TOWERS WHICH ARE OVER 200'-0", ADDITIONAL CABLE GROUNDING REQUIRED.
    C. GROUNDING AT BASE OF TOWER PRIOR TO TURNING HORIZONTAL.
    D. GROUNDING OUTSIDE THE EQUIPMENT SHELTER AT ENTRY PORT.
    E. GROUNDING INSIDE THE EQUIPMENT SHELTER AT THE ENTRY PORT.
37. ALL PROPOSED GROUND BAR DOWNLEADS ARE TO BE TERMINATED TO THE EXISTING ADJACENT GROUND
38. BAR DOWNLEADS A MINIMUM DISTANCE OF 4'-0" BELOW GROUND BAR. TERMINATIONS MAY BE EXOTHERMIC OR COMPRESSION.
39. THE CONTRACTOR SHALL BE RESPONSIBLE FOR VERIFYING THE ANTENNA AND THE COAX CONFIGURATION IS THE CORRECT MAKE AND MODELS, PRIOR TO INSTALLATION.
40. ALL CONNECTIONS FOR HANGERS, SUPPORTS, BRACING, ETC. SHALL BE INSTALLED PER TOWER MANUFACTURER'S SPECIFICATION & RECOMMENDATIONS.

GROUNDING NOTES

41. GROUNDING IS SHOWN DIAGRAMMATICALLY ONLY.
42. CONTRACTOR SHALL GROUND ALL EQUIPMENT AS A COMPLETE SYSTEM. GROUNDING SHALL BE IN COMPLIANCE WITH NEC SECTION 250 AND AT&T GROUNDING AND BONDING REQUIREMENTS (ATT-TP-76416) AND MANUFACTURER'S SPECIFICATIONS.
43. ALL GROUND CONDUCTORS SHALL BE COPPER; NO ALUMINUM CONDUCTORS SHALL BE USED.
44. ALL CABLES SHALL BE GROUNDED WITH COAXIAL CABLE GROUNDING KITS. FOLLOW THE MANUFACTURER'S RECOMMENDATIONS.
    A. GROUNDING AT THE ANTENNA LEVEL.
    B. GROUNDING AT MID LEVEL, TOWERS WHICH ARE OVER 200', ADDITIONAL CABLE GROUNDING REQUIRED.
    C. GROUNDING AT BASE OF TOWER PRIOR TO TURNING HORIZONTAL.
    D. GROUNDING OUTSIDE THE EQUIPMENT SHELTER AT ENTRY PORT.
    E. GROUNDING INSIDE THE EQUIPMENT SHELTER AT THE ENTRY PORT.
45. ALL PROPOSED GROUNDING BAR DOWNLEADS ARE TO BE TERMINATED TO THE EXISTING ADJACENT GROUNDING BAR DOWNLEADS A MINIMUM DISTANCE OF 4'-0" BELOW GROUNDING BAR. TERMINATIONS MAY BE EXOTHERMIC OR COMPRESSION.

APPLICANT/OWNER:

AT&T MOBILITY

8372 EAST BROAD ST.
REYNOLDSBURG, OH 43068

PREPARED BY:

BLACK & VEATCH

6800 W. 115TH ST, SUITE 2292
OVERLAND PARK, KANSAS 66211
(913) 458-2000

PROJECT NUMBER: 129021

STATE OF OHIO
PING JIANG
72759
REGISTERED
PROFESSIONAL ENGINEER
02/17/2016

IT IS A VIOLATION OF LAW FOR ANY PERSON, UNLESS THEY ARE ACTING UNDER THE DIRECTION OF A LICENSED PROFESSIONAL ENGINEER, TO ALTER THIS DOCUMENT.

LANDLORD/PROPERTY OWNER SIGNATURE

REV	DATE	DESCRIPTION
0	02.17.16	ISSUED FOR CONSTRUCTION

PROJECT LOCATION: USID (59304)

GAHANNA HIGH SCHOOL

511 HAVENS CORNERS ROAD
GAHANNA, OH 43230

DRAWING DESCRIPTION:

EQUIPMENT NOTES

DRAWING NUMBER:

T-6

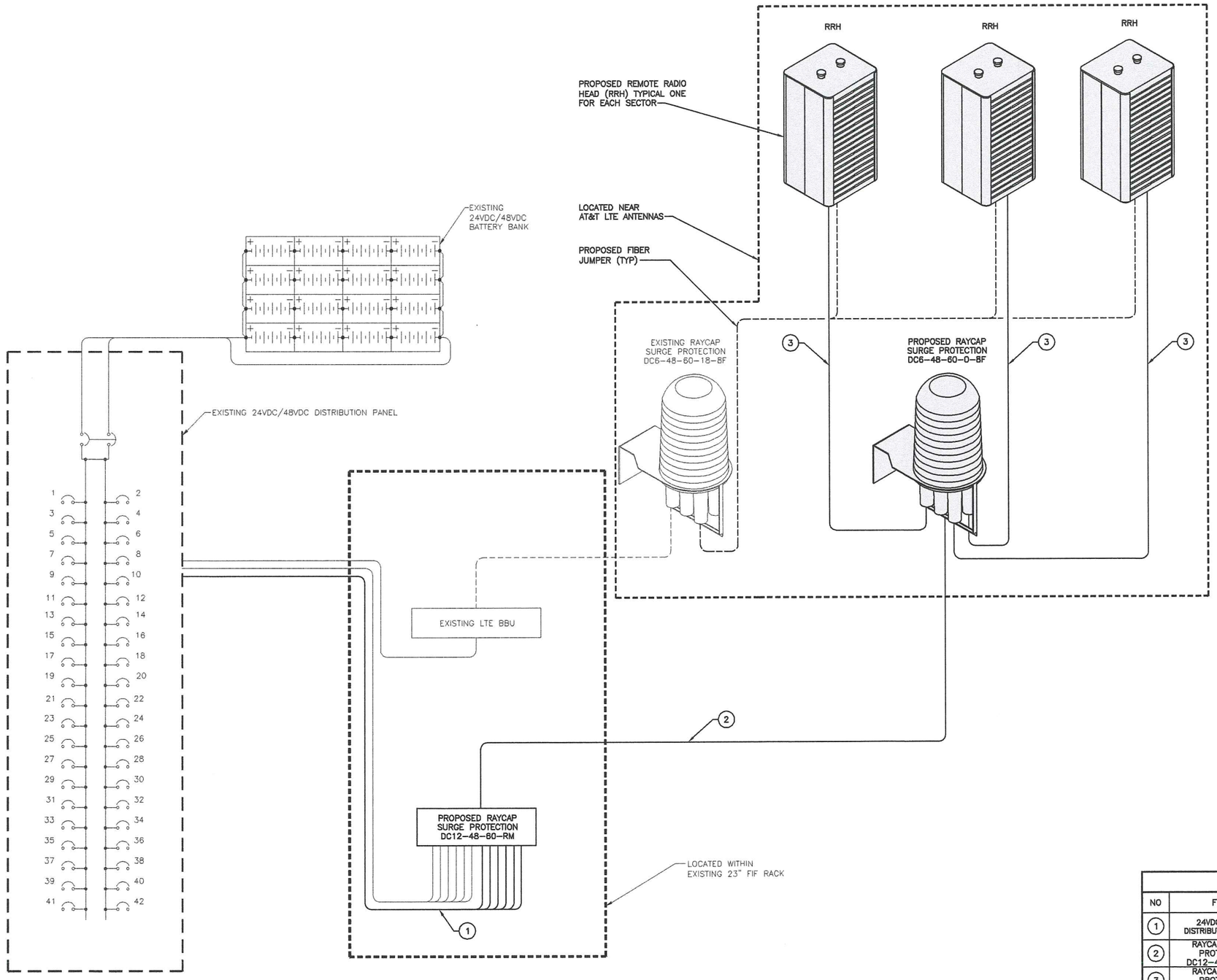

NOTES

1. DC POWER WIRING SHALL BE COLOR CODED AT EACH END FOR IDENTIFYING +24V AND −48V CONDUCTORS. RED MARKINGS SHALL IDENTIFY +24V AND BLUE MARKINGS SHALL IDENTIFY −48V. REFER TO ATT-002-290-701.
2. NON-LTE DC POWER WIRING SIZE 14 AWG TO 10 AWG SHALL BE TELCOFLEX III. DC POWER WIRING 8 AWG AND LARGER SHALL BE TELCOFLEX IV.
3. LTE POWER WIRING SHALL BE IN ACCORDANCE WITH ATT-002-290-531.
4. THE PROPOSED ELECTRICAL WORK FOR THE SCOPE OF THIS PROJECT IS LOW VOLTAGE DC POWER ONLY.
5. EXISTING LTE BBU WILL BE OPTIMIZED BY OTHERS, WHEN REQUIRED FOR UPGRADE.
6. EXISTING RACK MOUNTED DC SURGE PROTECTION UNIT SHALL BE SWAPPED OUT WITH PROPOSED RACK MOUNTED DC SURGE PROTECTION UNIT, WHEN REQUIRED FOR UPGRADE.

CIRCUIT SCHEDULE

NO	FROM	TO	CONFIGURATION
1	24VDC/48VDC DISTRIBUTION PANEL	RAYCAP SURGE PROTECTION DC12-48-60-RM	(6) 2-#10 THHN/THWN/VW-1 TYPE TC-ER DC CABLE
2	RAYCAP SURGE PROTECTION DC12-48-60-RM	RAYCAP SURGE PROTECTION DC6-48-60-0-8F	(2) 6-#8 THHN/THWN-VW-1 TYPE TC-ER DC CABLE
3	RAYCAP SURGE PROTECTION DC6-48-60-0-8F	RRH REMOTE RADIO HEAD	(1) 2-#12 THHN/THWN-VW-1 TYPE TC-ER DC CABLE

LTE 3C DC CIRCUIT DIAGRAM

APPLICANT/OWNER:

AT&T MOBILITY

8372 EAST BROAD ST.
REYNOLDSBURG, OH 43068

PREPARED BY:

BLACK & VEATCH

6800 W. 115TH ST, SUITE 2292
OVERLAND PARK, KANSAS 66211
(913) 458-2000

PROJECT NUMBER: 129021

STATE OF OHIO
PING JIANG
72759
REGISTERED PROFESSIONAL ENGINEER
02/17/2016

IT IS A VIOLATION OF LAW FOR ANY PERSON, UNLESS THEY ARE ACTING UNDER THE DIRECTION OF A LICENSED PROFESSIONAL ENGINEER, TO ALTER THIS DOCUMENT.

LANDLORD/PROPERTY OWNER SIGNATURE

REV	DATE	DESCRIPTION
0	02.17.16	ISSUED FOR CONSTRUCTION

PROJECT LOCATION: USID (59304)

GAHANNA HIGH SCHOOL

511 HAVENS CORNERS ROAD
GAHANNA, OH 43230

DRAWING DESCRIPTION:

LTE 3C DC
CIRCUIT DIAGRAM

DRAWING NUMBER:

E-1

NOTE:

1. ALL GROUNDING CONDUCTORS SHALL BE #2 AWG SUNLIGHT RESISTANT-TINNED STRANDED COPPER UNLESS NOTED OTHERWISE.
2. ALL 2x60W 850 & 1900 RRHS MODELS WILL REQUIRE A TOP AND BOTTOM CONNECTION.

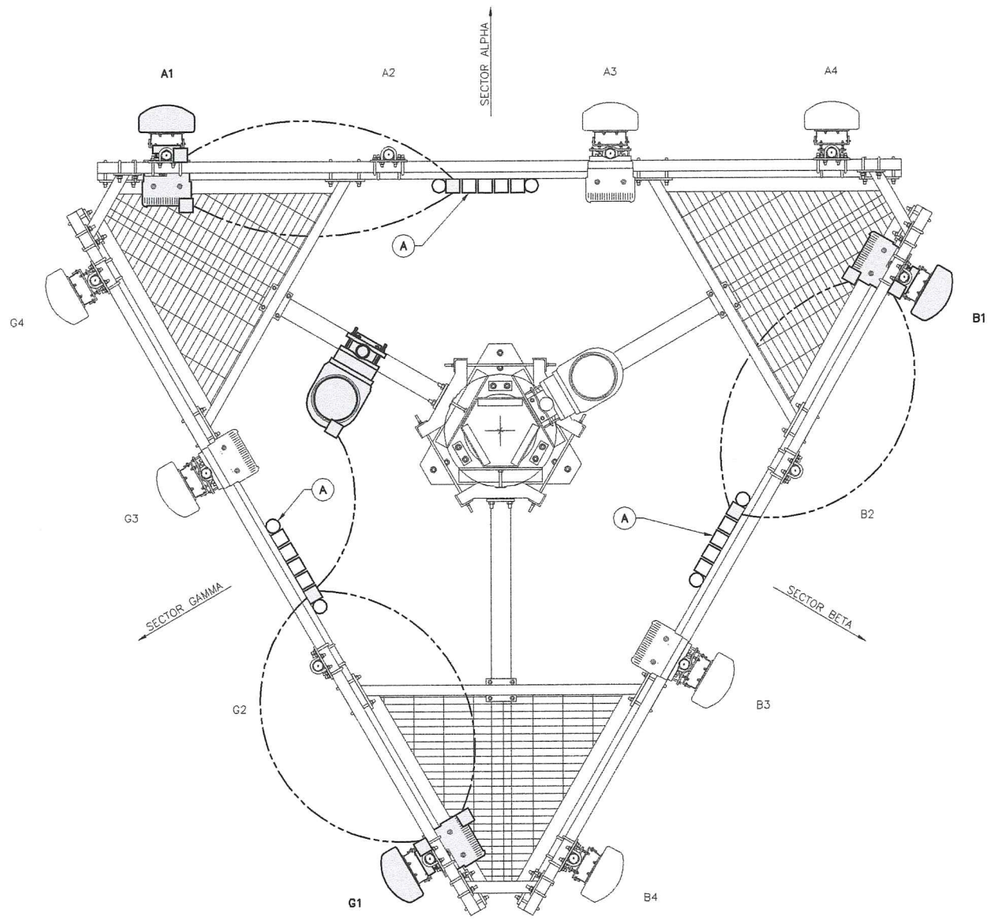

1. CONTRACTOR SHALL HAVE A COMPLETE UNDERSTANDING OF THE CONTENTS OF AT&T STANDARD TP-76416.
2. ALL INSTALLATIONS SHALL BE FIELD VERIFIED.
3. TOWER GROUNDING BAR: EXTEND (2) #2 AWG TINNED CU WIRE FROM BURIED GROUND RING UP TO THE TOWER GROUND BAR AND MAKE A MECHANICAL CONNECTION. SECURE GROUND BAR DIRECTLY TO TOWER WITH STAINLESS STEEL MOUNTING MATERIAL.
4. ANTENNA GROUNDING BAR: ANDREW CORPORATION PART #UGBKIT-0424-T MOUNT GROUND BAR DIRECTLY TO TOWER. SECURE TO TOWER WITH STAINLESS STEEL MOUNTING MATERIAL.
5. GROUNDING BAR: LOCATED CLOSE TO GRADE LOCK BOX TESSCO PART #351546: INSTALL PER MANUFACTURER GUIDELINES.
6. EXOTHERMIC OR COMPRESSION CONNECTION FOR PIPE MOUNT TO ANTENNA ROUTE CONDUCTOR TO NEAREST GROUNDING BAR SO THE GROUNDING CONDUCTORS PROVIDE A STRAIGHT DOWNWARD PATH TO GROUND. USE #2 AWG SOLID TINNED COPPER CONDUCTOR. GROUNDING CONNECTION SHALL BE LOCATED AT THE TOP 2" OF PIPE.
7. ALL GROUNDING CONDUCTORS SHALL BE #2 AWG SUNLIGHT RESISTANT-TINNED STRANDED COPPER UNLESS NOTED OTHERWISE.
8. ALL GROUNDING CONDUCTORS SHALL PROVIDE A STRAIGHT DOWNWARD PATH TO GROUND WITH GRADUAL BEND AS REQUIRED. GROUND WIRES SHALL NOT BE LOOPED OR SHARPLY BENT.
9. KOPR-SHIELD ANTI-OXIDATION COMPOUND SHALL BE USED ON ALL COMPRESSION GROUNDING CONNECTIONS.
10. ALL EXOTHERMIC CONNECTIONS SHALL BE INSTALLED UTILIZING THE PROPER CONNECTION/MOLD AND MATERIALS FOR THE PARTICULAR APPLICATION.
11. ALL BOLTED GROUNDING CONNECTIONS SHALL BE INSTALLED WITH AN EXTERNAL TOOTHED LOCK WASHER. GROUNDING BUS BARS MAY HAVE PRE-PUNCHED HOLES OR TAPPED HOLES. ALL HARDWARE SHALL BE SECURITY TORQUE HARDWARE 3/8" STAINLESS STEEL.
12. EXTERNAL GROUNDING CONDUCTOR SHALL NOT BE INSTALLED OR ROUTED THROUGH HOLES IN ANY METAL OBJECTS, CONDUITS, OR SUPPORTS TO PRECLUDE ESTABLISHING A MAGNETIC CHOKE POINT.
13. PLASTIC CLIPS SHALL BE USED TO FASTEN AND SUPPORT GROUNDING CONDUCTORS. FERROUS METAL CLIPS WHICH COMPLETELY SURROUND THE GROUNDING CONDUCTOR SHALL NOT BE USED.
14. IF COAX ON ICE BRIDGE IS MORE THAN 6' FROM THE GROUND BAR AT THE BASE OF THE TOWER, A SECOND GROUND BAR WILL BE NEEDED AT THE END OF THE ICE BRIDGE RUN TO GROUND THE COAX GROUND KIT AND THE IN-LINE SURGE ARRESTORS (SURGE ARRESTORS INSTALLED BY LUCENT ONLY HAVE 6' GROUND TAILS).
15. CONTRACTOR SHALL REPAIR/REPLACE EXISTING GROUNDING SYSTEM COMPONENTS DAMAGED DURING CONSTRUCTION AT THE CONTRACTORS EXPENSE.

NOTES

(A) EXISTING ANTENNA GROUND BAR: FIELD LOCATE

KEY NOTES

- EXOTHERMIC TYPE CONNECTIONS
- COMPRESSION TYPE CONNECTIONS
- GROUNDING CONDUCTOR
- GROUNDING BAR

LEGEND

APPLICANT/OWNER:

AT&T MOBILITY

8372 EAST BROAD ST.
REYNOLDSBURG, OH 43068

PREPARED BY:

BLACK & VEATCH

6800 W. 115TH ST, SUITE 2292
OVERLAND PARK, KANSAS 66211
(913) 458-2000

PROJECT NUMBER: 129021

STATE OF OHIO
PING JIANG
72759
REGISTERED
PROFESSIONAL ENGINEER
02/17/2016

IT IS A VIOLATION OF LAW FOR ANY PERSON, UNLESS THEY ARE ACTING UNDER THE DIRECTION OF A LICENSED PROFESSIONAL ENGINEER, TO ALTER THIS DOCUMENT.

LANDLORD/PROPERTY OWNER SIGNATURE

REV	DATE	DESCRIPTION
0	02.17.16	ISSUED FOR CONSTRUCTION

PROJECT LOCATION: USID (59304)

GAHANNA HIGH SCHOOL

511 HAVENS CORNERS ROAD
GAHANNA, OH 43230

DRAWING DESCRIPTION:

ANTENNA GROUNDING PLAN

DRAWING NUMBER:

E-2

ANTENNA GROUNDING PLAN

12" 6" 0 1' 2' 3'
3/4"=1'-0"

1

PART 1 – GENERAL

1.1 GENERAL CONDITIONS:

A. CONTRACTOR SHALL INSPECT THE EXISTING SITE CONDITIONS PRIOR TO SUBMITTING BID. ANY QUESTIONS ARISING DURING THE BID PERIOD IN REGARDS TO THE CONTRACTORS FUNCTIONS, THE SCOPE OF WORK, OR ANY OTHER ISSUE RELATED TO THIS PROJECT SHALL BE BROUGHT UP DURING THE BID PERIOD WITH THE PROJECT MANAGER FOR CLARIFICATION, NOT AFTER THE CONTRACT HAS BEEN AWARDED.

B. THE CONTRACTOR SHALL OBTAIN PERMITS, LICENSES, MAKE ALL DEPOSITS, AND PAY ALL FEES REQUIRED FOR THE CONSTRUCTION PERFORMANCE FOR THE WORK UNDER THIS SECTION.

C. DRAWINGS SHOW THE GENERAL ARRANGEMENT OF ALL SYSTEMS AND COMPONENTS COVERED UNDER THIS SECTION. THE CONTRACTOR SHALL VERIFY ALL DIMENSIONS. DRAWING SHALL NOT BE SCALED TO DETERMINE DIMENSIONS.

1.2 LAWS, REGULATIONS, ORDINANCES, STATUTES AND CODES.

A. ALL WORK SHALL BE INSTALLED IN ACCORDANCE WITH THE LATEST EDITION OF THE NATIONAL ELECTRICAL CODE, AND ALL APPLICABLE LOCAL LAWS, REGULATIONS, ORDINANCES, STATUTES AND CODES. CONDUIT BENDS SHALL BE THE RADIUS BEND FOR THE TRADE SIZE OF CONDUIT IN COMPLIANCE WITH THE LATEST EDITIONS OF NEC.

1.3 REFERENCES:

A. THE PUBLICATIONS LISTED BELOW ARE PART OF THIS SPECIFICATION. EACH PUBLICATION SHALL BE THE LATEST REVISION AND ADDENDUM IN EFFECT ON THE DATE. THIS SPECIFICATION IS ISSUED FOR CONSTRUCTION UNLESS OTHERWISE NOTED. EXCEPT AS MODIFIED BY THE REQUIREMENT SPECIFIED HEREIN OR THE DETAILS OF THE DRAWINGS, WORK INCLUDED IN THIS SPECIFICATION SHALL CONFORM TO THE APPLICABLE PROVISION OF THESE PUBLICATIONS.

1. ANSI/IEEE (AMERICAN NATIONAL STANDARDS INSTITUTE)
2. ASTM (AMERICAN SOCIETY FOR TESTING AND MATERIALS)
3. ICEA (INSULATED CABLE ENGINEERS ASSOCIATION)
4. NEMA (NATIONAL ELECTRICAL MANUFACTURER'S ASSOCIATION)
5. NFPA (NATIONAL FIRE PROTECTION ASSOCIATION)
6. OSHA (OCCUPATIONAL SAFETY AND HEALTH ADMINISTRATION)
7. UL (UNDERWRITERS LABORATORIES INC.)
8. AT&T GROUNDING AND BONDING STANDARDS TP-76416

1.4 SCOPE OF WORK

A. WORK UNDER THIS SECTION SHALL CONSIST OF FURNISHING ALL LABOR, MATERIAL, AND ASSOCIATED SERVICES REQUIRED TO COMPLETE REQUIRED CONSTRUCTION AND BE OPERATIONAL.

B. ALL ELECTRICAL EQUIPMENT UNDER THIS CONTRACT SHALL BE PROPERLY TESTED, ADJUSTED, AND ALIGNED BY THE CONTRACTOR.

C. THE CONTRACTOR SHALL BE RESPONSIBLE FOR ALL EXCAVATING, DRAINING, TRENCHES, BACKFILLING, AND REMOVAL OF EXCESS DIRT.

D. THE CONTRACTOR SHALL FURNISH TO THE OWNER WITH CERTIFICATES OF A FINAL INSPECTION AND APPROVAL FROM THE INSPECTION AUTHORITIES HAVING JURISDICTION.

E. THE CONTRACTOR SHALL PREPARE A COMPLETE SET OF AS-BUILT DRAWINGS, DOCUMENT ALL WIRING EQUIPMENT CONDITIONS, AND CHANGES WHILE COMPLETING THIS CONTRACT. THE AS-BUILT DRAWINGS SHALL BE SUBMITTED AT COMPLETION OF THE PROJECT.

PART 2 – PRODUCTS

2.1 GENERAL:

A. ALL MATERIALS AND EQUIPMENT SHALL BE UL LISTED, NEW, AND FREE FROM DEFECTS.

B. ALL ITEMS OF MATERIALS AND EQUIPMENT SHALL BE ACCEPTABLE TO THE AUTHORITY HAVING JURISDICTION AS SUITABLE FOR THE USE INTENDED.

C. ALL EQUIPMENT SHALL BEAR THE UNDERWRITERS LABORATORIES LABEL OF APPROVAL, AND SHALL CONFORM TO REQUIREMENT OF THE NATIONAL ELECTRICAL CODE.

D. ALL OVERCURRENT DEVICES SHALL HAVE AN INTERRUPTING CURRENT RATING THAT SHALL BE GREATER THAN THE SHORT CIRCUIT CURRENT TO WHICH THEY ARE SUBJECTED, 10,000 AIC MINIMUM. VERIFY AVAILABLE SHORT CIRCUIT CURRENT DOES NOT EXCEED THE RATING OF ELECTRICAL EQUIPMENT IN ACCORDANCE WITH ARTICLE 110.24 NEC OR THE MOST CURRENT ADOPTED CODE PER THE GOVERNING JURISDICTION.

2.2 MATERIALS AND EQUIPMENT:

A. CONDUIT:

1. RIGID METAL CONDUIT (RMC) SHALL BE HOT-DIPPED GALVANIZED INSIDE AND OUTSIDE INCLUDING ENDS AND THREADS AND ENAMELED OR LACQUERED INSIDE IN ADDITION TO GALVANIZING.
2. LIQUIDTIGHT FLEXIBLE METAL CONDUIT SHALL BE UL LISTED.
3. CONDUIT CLAMPS, STRAPS AND SUPPORTS SHALL BE STEEL OR MALLEABLE IRON. ALL FITTINGS SHALL BE COMPRESSION AND CONCRETE TIGHT TYPE. GROUNDING BUSHINGS WITH INSULATED THROATS SHALL BE INSTALLED ON ALL CONDUIT TERMINATIONS.
4. NONMETALLIC CONDUIT AND FITTINGS SHALL BE SCHEDULE 40 PVC. INSTALL USING SOLVENT-CEMENT-TYPE JOINTS AS RECOMMENDED BY THE MANUFACTURER.

B. CONDUCTORS AND CABLE:

1. CONDUCTORS AND CABLE SHALL BE FLAME-RETARDANT, MOISTURE AND HEAT RESISTANT THERMOPLASTIC, SINGLE CONDUCTOR, COPPER, TYPE THHN/THWN-2, 600 VOLT, SIZE AS INDICATED, #12 AWG SHALL BE THE MINIMUM SIZE CONDUCTOR USED.
2. #10 AWG AND SMALLER CONDUCTOR SHALL BE SOLID OR STRANDED AND #8 AWG AND LARGER CONDUCTORS SHALL BE STRANDED.
3. SOLDERLESS, COMPRESSION-TYPE CONNECTORS SHALL BE USED FOR TERMINATION OF ALL STRANDED CONDUCTORS.
4. STRAIN-RELIEF SUPPORTS GRIPS SHALL BE HUBBELL KELLEMS OR APPROVED EQUAL. CABLES SHALL BE SUPPORTED IN ACCORDANCE WITH THE NEC AND CABLE MANUFACTURER'S RECOMMENDATIONS.
5. ALL CONDUCTORS SHALL BE TAGGED AT BOTH ENDS OF THE CONDUCTOR, AT ALL PULL BOXES, J-BOXES, EQUIPMENT AND CABINETS AND SHALL BE IDENTIFIED WITH APPROVED PLASTIC TAGS (ACTION CRAFT, BRADY, OR APPROVED EQUAL).

C. DISCONNECT SWITCHES:

1. DISCONNECT SWITCHES SHALL BE HEAVY DUTY, DEAD-FRONT, QUICK-MAKE, QUICK-BREAK, EXTERNALLY OPERABLE, HANDLE LOCKABLE AND INTERLOCK WITH COVER IN CLOSED POSITION, RATING AS INDICATED, UL LABELED FURNISHED IN NEMA 3R ENCLOSURE, SQUARE-D OR ENGINEER APPROVED EQUAL.

D. CHEMICAL ELECTROLYTIC GROUNDING SYSTEM:

1. INSTALL CHEMICAL GROUNDING AS REQUIRED. THE SYSTEM SHALL BE ELECTROLYTIC MAINTENANCE FREE ELECTRODE CONSISTING OF RODS WITH A MINIMUM #2 AWG CU EXOTHERMICALLY WELDED PIGTAIL, PROTECTIVE BOXES, AND BACKFILL MATERIAL. MANUFACTURER SHALL BE LYNCOLE XIT GROUNDING ROD TYPES K2-(*)CS OR K2L-(*)CS (*) LENGTH AS REQUIRED.
2. GROUND ACCESS BOX SHALL BE A POLYPLASTIC BOX FOR NON-TRAFFIC APPLICATIONS, INCLUDING BOLT DOWN FLUSH COVER WITH "BREATHER" HOLES, XIT MODEL #XB-22. ALL DISCONNECT SWITCHES AND CONTROLLING DEVICES SHALL BE PROVIDED WITH ENGRAVED LAMICOID NAMEPLATES INDICATING EQUIPMENT CONTROLLED, BRANCH CIRCUITS ID NUMBERING, AND THE ELECTRICAL POWER SOURCE.
3. BACKFILL MATERIAL SHALL BE LYNCONITE AND LYNCOLE GROUNDING GRAVEL.

E. SYSTEM GROUNDING:

1. ALL GROUNDING COMPONENTS SHALL BE TINNED AND GROUNDING CONDUCTOR SHALL BE #2 AWG BARE, SOLID, TINNED, COPPER. ABOVE GRADE GROUNDING CONDUCTORS SHALL BE INSULATED WHERE NOTED.
2. GROUNDING BUSES SHALL BE BARE, TINNED, ANNEALED COPPER BARS OF RECTANGULAR CROSS SECTION. STANDARD BUS BARS MGB, SHALL BE FURNISHED AND INSTALLED BY THE CONTRACTOR. THEY SHALL NOT BE FABRICATED OR MODIFIED IN THE FIELD. ALL GROUNDING BUSES SHALL BE IDENTIFIED WITH MINIMUM 3/4" LETTERS BY WAY OF STENCILING OR DESIGNATION PLATE.
3. CONNECTORS SHALL BE HIGH-CONDUCTIVITY, HEAVY DUTY, LISTED AND LABELED AS GROUNDING CONNECTORS FOR THE MATERIALS USED. USE TWO-HOLE COMPRESSION LUGS WITH HEAT SHRINK FOR MECHANICAL CONNECTIONS. INTERIOR CONNECTIONS USE TWO-HOLE COMPRESSION LUGS WITH INSPECTION WINDOW AND CLEAR HEAT SHRINK.
4. EXOTHERMIC WELDED CONNECTIONS SHALL BE PROVIDED IN KIT FORM AND SELECTED FOR THE SPECIFIC TYPES, SIZES, AND COMBINATIONS OF CONDUCTORS AND OTHER ITEMS TO BE CONNECTED.
5. GROUND RODS SHALL BE COPPER-CLAD STEEL WITH HIGH-STRENGTH STEEL CORE AND ELECTROLYTIC-GRADE COPPER OUTER SHEATH, MOLTEN WELDED TO CORE, 5/8"x10'-0". ALL GROUNDING RODS SHALL BE INSTALLED WITH INSPECTION SLEEVES.
6. INSTALL AN EQUIPMENT GROUNDING CONDUCTOR IN ALL CONDUITS IN COMPLIANCE WITH THE AT&T SPECIFICATIONS AND NEC. THE EQUIPMENT GROUNDING CONDUCTORS SHALL BE BONDED AT ALL JUNCTION BOXES, PULLBOXES, DISCONNECT SWITCHES, STARTERS, AND EQUIPMENT CABINETS.

F. OTHER MATERIALS:

1. THE CONTRACTOR SHALL PROVIDE OTHER MATERIALS, THOUGH NOT SPECIFICALLY DESCRIBED, WHICH ARE REQUIRED FOR A COMPLETELY OPERATIONAL SYSTEM AND PROPER INSTALLATION OF THE WORK.
2. PROVIDE PULL BOXES AND JUNCTION BOXES WHERE SHOWN OR REQUIRED BY NEC.

G. PANELS AND LOAD CENTERS:

1. ALL PANEL DIRECTORIES SHALL BE TYPEWRITTEN.

PART 3 – EXECUTION

3.1 GENERAL:

A. ALL MATERIAL AND EQUIPMENT SHALL BE INSTALLED IN STRICT ACCORDANCE WITH THE MANUFACTURER'S RECOMMENDATIONS.

B. EQUIPMENT SHALL BE TIGHTLY COVERED AND PROTECTED AGAINST DIRT OR WATER, AND AGAINST CHEMICAL OR MECHANICAL INJURY DURING INSTALLATION AND CONSTRUCTION PERIODS.

3.2 LABOR AND WORKMANSHIP:

A. ALL LABOR FOR THE INSTALLATION OF MATERIALS AND EQUIPMENT FURNISHED FOR THE ELECTRICAL SYSTEM SHALL BE INSTALLED BY EXPERIENCED WIREMEN, IN A NEAT AND WORKMAN-LIKE MANNER.

B. ALL ELECTRICAL EQUIPMENT SHALL BE ADJUSTED, ALIGNED AND TESTED BY THE CONTRACTOR AS REQUIRED TO PRODUCE THE INTENDED PERFORMANCE.

C. UPON COMPLETION OF WORK, THE CONTRACTOR SHALL THOROUGHLY CLEAN ALL EXPOSED EQUIPMENT, REMOVE ALL LABELS AND ANY DEBRIS, CRATING OR CARTONS AND LEAVE THE INSTALLATION FINISHED AND READY FOR OPERATION.

3.3 COORDINATION:

A. THE CONTRACTOR SHALL COORDINATE THE INSTALLATION OF ELECTRICAL ITEMS WITH THE OWNER-FURNISHED EQUIPMENT DELIVERY SCHEDULE TO PREVENT UNNECESSARY DELAYS IN THE TOTAL WORK.

3.4 INSTALLATION:

A. CONDUIT:

1. ALL ELECTRICAL WIRING SHALL BE INSTALLED IN CONDUIT AS SPECIFIED. NO CONDUIT OR TUBING OF LESS THAN 3/4 INCH TRADE SIZE.
2. PROVIDE RIGID PVC SCHEDULE 80 CONDUITS FOR ALL RISERS, RMC OTHERWISE NOTED. EMT MAY BE INSTALLED FOR EXTERIOR CONDUITS WHERE NOT SUBJECT TO PHYSICAL DAMAGE.
3. INSTALL SCHEDULE 40 PVC CONDUIT WITH A MINIMUM COVER OF 24" UNDER ROADWAYS, PARKING LOTS, STREETS, AND ALLEYS. CONDUIT SHALL HAVE A MINIMUM COVER OF 18" IN ALL OTHER NON-TRAFFIC APPLICATIONS (REFER TO LATEST NEC, TABLE 300.5).
4. USE GALVANIZED FLEXIBLE STEEL CONDUIT WHERE DIRECT CONNECTION TO EQUIPMENT WITH MOVEMENT, VIBRATION, OR FOR EASE OF MAINTENANCE. USE LIQUID TIGHT, FLEXIBLE METAL CONDUIT FOR OUTDOOR APPLICATIONS. INSTALL GALVANIZED FLEXIBLE STEEL CONDUIT AT ALL POINTS OF CONNECTION TO EQUIPMENT MOUNTED ON SUPPORT TO ALLOW FOR EXPANSION AND CONTRACTION.
5. A RUN OF CONDUIT BETWEEN BOXES OR EQUIPMENT SHALL NOT CONTAIN MORE THAN THE EQUIVALENT OF THREE QUARTER-BENDS. CONDUIT BEND SHALL BE MADE WITH THE UL LISTED BENDER OR FACTORY 90 DEGREE ELBOWS MAY BE USED.
6. FIELD FABRICATED CONDUITS SHALL BE CUT SQUARE WITH A CONDUIT CUTTING TOOL AND REAMED TO PROVIDE A SMOOTH INSIDE SURFACE.
7. PROVIDE INSULATED GROUNDING BUSHING FOR ALL CONDUITS.
8. CONTRACTOR IS RESPONSIBLE FOR PROTECTING ALL CONDUITS DURING CONSTRUCTION. TEMPORARY OPENINGS IN THE CONDUIT SYSTEM SHALL BE PLUGGED OR CAPPED TO PREVENT ENTRANCE OF MOISTURE OR FOREIGN MATTER. CONTRACTOR SHALL REPLACE ANY CONDUITS CONTAINING FOREIGN MATERIALS THAT CANNOT BE REMOVED.
9. ALL CONDUITS SHALL BE SWABBED CLEAN BY PULLING AN APPROPRIATE SIZE MANDREL THROUGH THE CONDUIT BEFORE INSTALLATION OF CONDUCTORS OR CABLES. CONDUIT SHALL BE FREE OF DIRT AND DEBRIS.
10. INSTALL PULL STRINGS IN ALL CLEAN EMPTY CONDUITS. IDENTIFY PULL STRINGS AT EACH END.
11. INSTALL 2" HIGHLY VISIBLE AND DETECTABLE TAPE 12" ABOVE ALL UNDERGROUND CONDUITS AND CONDUCTORS.
12. CONDUITS SHALL BE INSTALLED IN SUCH A MANNER AS TO ENSURE AGAINST COLLECTION OF TRAPPED CONDENSATION.
13. PROVIDE CORE DRILLING AS NECESSARY FOR PENETRATIONS TO ALLOW FOR RACEWAYS AND CABLES TO BE ROUTED THROUGH THE BUILDING. DO NOT PENETRATE STRUCTURAL MEMBERS. SLEEVES AND/OR PENETRATIONS IN FIRE RATED CONSTRUCTION SHALL BE EFFECTIVELY SEALED WITH FIRE RATED MATERIAL WHICH SHALL MAINTAIN THE FIRE RATING OF THE WALL OR STRUCTURE. FIRE STOPS AT FLOOR PENETRATIONS SHALL PREVENT PASSAGE OF WATER, SMOKE, FIRE, AND FUMES. ALL MATERIAL SHALL BE UL APPROVED FOR THIS PURPOSE.

B. CONDUCTORS AND CABLE:

1. ALL POWER WIRING SHALL BE COLOR CODED AS FOLLOWS:

DESCRIPTION	208/240/120 VOLT SYSTEMS
PHASE A	BLACK
PHASE B	RED
PHASE C	BLUE
NEUTRAL	WHITE
GROUNDING	GREEN

2. SPLICES SHALL BE MADE ONLY AT OUTLETS, JUNCTION BOXES, OR ACCESSIBLE RACEWAY CONDUITS APPROVED FOR THIS PURPOSE.
3. PULLING LUBRICANTS SHALL BE UL APPROVED. CONTRACTOR SHALL USE NYLON OR HEMP ROPE FOR PULLING CONDUCTOR OR CABLES INTO THE CONDUIT.
4. CABLES SHALL BE NEATLY TRAINED, WITHOUT INTERLACING, AND BE OF SUFFICIENT LENGTH IN ALL BOXES & EQUIPMENT TO PERMIT MAKING A NEAT ARRANGEMENT. CABLES SHALL BE SECURED IN A MANNER TO AVOID TENSION ON CONDUCTORS OR TERMINALS. CONDUCTORS SHALL BE PROTECTED FROM MECHANICAL INJURY AND MOISTURE. SHARP BENDS OVER CONDUIT BUSHINGS IS PROHIBITED. DAMAGED CABLES SHALL BE REMOVED AND REPLACED AT THE CONTRACTOR'S EXPENSE.

C. DISCONNECT SWITCHES:

1. INSTALL DISCONNECT SWITCHES LEVEL AND PLUMB. CONNECT TO WIRING SYSTEM AND GROUNDING SYSTEM AS INDICATED.

D. GROUNDING:

1. ALL METALLIC PARTS OF ELECTRICAL EQUIPMENT WHICH DO NOT CARRY CURRENT SHALL BE GROUNDED IN ACCORDANCE WITH THE REQUIREMENTS OF THE BUILDING MANUFACTURER, AT&T GROUNDING AND BONDING STANDARDS TP-76416, ND-00135, AND THE NATIONAL ELECTRICAL CODE.
2. PROVIDE ELECTRICAL GROUNDING AND BONDING SYSTEM INDICATED WITH ASSEMBLY OF MATERIALS, INCLUDING GROUNDING ELECTRODES, BONDING JUMPERS AND ADDITIONAL ACCESSORIES AS REQUIRED FOR A COMPLETE INSTALLATION.
3. ALL GROUNDING CONDUCTORS SHALL PROVIDE A STRAIGHT DOWNWARD PATH TO GROUND WITH GRADUAL BEND AS REQUIRED. GROUNDING CONDUCTORS SHALL NOT BE LOOPED OR SHARPLY BENT. ROUTE GROUNDING CONNECTIONS AND CONDUCTORS TO GROUND IN THE SHORTEST AND STRAIGHTEST PATHS POSSIBLE TO MINIMIZE TRANSIENT VOLTAGE RISES.
4. BUILDINGS AND/OR NEW TOWERS GREATER THAN 75 FEET IN HEIGHT AND WHERE THE MAIN GROUNDING CONDUCTORS ARE REQUIRED TO BE ROUTED TO GRADE, THE CONTRACTOR SHALL ROUTE TWO GROUNDING CONDUCTORS FROM THE ROOFTOP, TOWERS, AND WATER TOWERS GROUNDING RING, TO THE EXISTING GROUNDING SYSTEM, THE GROUNDING CONDUCTORS SHALL NOT BE SMALLER THAN 2/0 AWG COPPER. ROOFTOP GROUNDING RING SHALL BE BONDED TO THE EXISTING GROUNDING SYSTEM, THE BUILDING STEEL COLUMNS, LIGHTNING PROTECTION SYSTEM, AND BUILDING MAIN WATER LINE (FERROUS OR NONFERROUS METAL PIPING ONLY). SEE STANDARD 6.3.2.2.
5. TIGHTEN GROUNDING AND BONDING CONNECTORS, INCLUDING SCREWS AND BOLTS, IN ACCORDANCE WITH MANUFACTURER'S PUBLISHED TORQUE TIGHTENING VALUES FOR CONNECTORS AND BOLTS. WHERE MANUFACTURER'S TORQUING REQUIREMENTS ARE NOT AVAILABLE, TIGHTEN CONNECTIONS TO COMPLY WITH TIGHTENING TORQUE VALUES SPECIFIED IN UL TO ASSURE PERMANENT AND EFFECTIVE GROUNDING.
6. CONTRACTOR SHALL VERIFY THE LOCATIONS OF GROUNDING TIE-IN-POINTS TO THE EXISTING GROUNDING SYSTEM. ALL UNDERGROUND GROUNDING CONNECTIONS SHALL BE MADE BY THE EXOTHERMIC WELD PROCESS AND INSTALLED IN ACCORDANCE WITH THE MANUFACTURER'S INSTRUCTIONS.
7. ALL GROUNDING CONNECTIONS SHALL BE INSPECTED FOR TIGHTNESS. EXOTHERMIC WELDED CONNECTIONS SHALL BE APPROVED BY THE INSPECTOR HAVING JURISDICTION BEFORE BEING PERMANENTLY CONCEALED.
8. APPLY CORROSION-RESISTANT FINISH TO FIELD CONNECTIONS AND PLACES WHERE FACTORY APPLIED PROTECTIVE COATINGS HAVE BEEN DESTROYED. USE KOPR-SHIELD ANTI-OXIDATION COMPOUND ON ALL COMPRESSION GROUNDING CONNECTIONS.
9. A SEPARATE, CONTINUOUS, INSULATED EQUIPMENT GROUNDING CONDUCTOR SHALL BE INSTALLED IN ALL FEEDER AND BRANCH CIRCUITS.
10. BOND ALL INSULATED GROUNDING BUSHINGS WITH A BARE #6 AWG GROUNDING CONDUCTOR TO A GROUND BUS.
11. DIRECT BURIED GROUNDING CONDUCTORS SHALL BE INSTALLED AT A NOMINAL DEPTH OF 36" MINIMUM BELOW GRADE, OR 6" BELOW THE FROST LINE, USE THE GREATER OF THE TWO DISTANCES.
12. ALL GROUNDING CONDUCTORS EMBEDDED IN OR PENETRATING CONCRETE SHALL BE INSTALLED IN SCHEDULE 40 PVC CONDUIT.
13. THE INSTALLATION OF CHEMICAL ELECTROLYTIC GROUNDING SYSTEM SHALL BE IN STRICT ACCORDANCE WITH MANUFACTURER'S INSTRUCTIONS. REMOVE SEALING TAPE FROM LEACHING AND BREATHER HOLES. INSTALL PROTECTIVE BOX FLUSH WITH GRADE.
14. DRIVE GROUND RODS UNTIL TOPS ARE A MINIMUM DISTANCE OF 36" DEPTH OR 6" BELOW FROST LINE, USING THE GREATER OF THE TWO DISTANCES.
15. IF COAX ON THE ICE BRIDGE IS MORE THAN 6 FT. FROM THE GROUNDING BAR AT THE BASE OF THE TOWER, A SECOND GROUNDING BAR WILL BE NEEDED AT THE END OF THE ICE BRIDGE, TO GROUND THE COAX CABLE GROUNDING KITS AND IN-LINE ARRESTORS.
16. CONTRACTOR SHALL REPAIR, AND/OR REPLACE, EXISTING GROUNDING SYSTEM COMPONENTS DAMAGED DURING CONSTRUCTION AT THE CONTRACTOR'S EXPENSE.

3.5 ACCEPTANCE TESTING:

A. CERTIFIED PERSONNEL USING CERTIFIED EQUIPMENT SHALL PERFORM REQUIRED TESTS AND SUBMIT WRITTEN TEST REPORTS UPON COMPLETION.

B. WHEN MATERIAL AND/OR WORKMANSHIP IS FOUND NOT TO COMPLY WITH THE SPECIFIED REQUIREMENTS, THE NON-COMPLYING ITEMS SHALL BE REMOVED FROM THE PROJECT SITE AND REPLACED WITH ITEMS COMPLYING WITH THE SPECIFIED REQUIREMENTS PROMPTLY AFTER RECEIPT OF NOTICE FOR NON-COMPLIANCE.

C. TEST PROCEDURES:

1. ALL FEEDERS SHALL HAVE INSULATION TESTED AFTER INSTALLATION, BEFORE CONNECTION TO DEVICES. THE CONDUCTORS SHALL TEST FREE FROM SHORT CIRCUITS AND GROUNDS. TESTING SHALL BE FOR ONE MINUTE USING 1000V DC. PROVIDE WRITTEN DOCUMENTATION FOR ALL TEST RESULTS.
2. PRIOR TO ENERGIZING CIRCUITRY, TEST WIRING DEVICES FOR ELECTRICAL CONTINUITY AND PROPER POLARITY CONNECTIONS.
3. MEASURE AND RECORD VOLTAGES BETWEEN PHASES AND BETWEEN PHASE CONDUCTORS AND NEUTRALS. SUBMIT A REPORT OF MAXIMUM AND MINIMUM VOLTAGES.
4. PERFORM GROUNDING TEST TO MEASURE GROUNDING RESISTANCE OF GROUNDING SYSTEM USING THE IEEE STANDARD 3-POINT "FALL-OF-POTENTIAL" METHOD. PROVIDE PLOTTED TEST VALUES AND LOCATION SKETCH. NOTIFY THE ENGINEER IMMEDIATELY IF MEASURED VALUE IS OVER 5 OHMS.

APPLICANT/OWNER:

AT&T MOBILITY

8372 EAST BROAD ST.
REYNOLDSBURG, OH 43068

PREPARED BY:

BLACK & VEATCH

6800 W. 115TH ST, SUITE 2292
OVERLAND PARK, KANSAS 66211
(913) 458-2000

PROJECT NUMBER: 129021

STATE OF OHIO
PING JIANG
72759
REGISTERED
PROFESSIONAL ENGINEER
02/17/2016

IT IS A VIOLATION OF LAW FOR ANY PERSON, UNLESS THEY ARE ACTING UNDER THE DIRECTION OF A LICENSED PROFESSIONAL ENGINEER, TO ALTER THIS DOCUMENT.

LANDLORD/PROPERTY OWNER SIGNATURE

REV	DATE	DESCRIPTION
0	02.17.16	ISSUED FOR CONSTRUCTION

PROJECT LOCATION: USID (59304)

GAHANNA HIGH SCHOOL

511 HAVENS CORNERS ROAD
GAHANNA, OH 43230

DRAWING DESCRIPTION:

ELECTRICAL SECTION NOTES

DRAWING NUMBER:

E-3

EXOTHERMIC CONNECTION
MECHANICAL CONNECTION
CHEMICAL ELECTROLYTIC GROUNDING SYSTEM
TEST CHEMICAL ELECTROLYTIC GROUNDING SYSTEM
EXOTHERMIC WITH INSPECTION SLEEVE
GROUNDING BAR
GROUND ROD
TEST GROUND ROD WITH INSPECTION SLEEVE
SINGLE POLE SWITCH
DUPLEX RECEPTACLE
DUPLEX GFCI RECEPTACLE
FLUORESCENT LIGHTING FIXTURE (2) TWO LAMPS 48–T8
SMOKE DETECTION (DC)
EMERGENCY LIGHTING (DC)
SECURITY LIGHT W/PHOTOCELL LITHONIA ALXW LED–1–25A400/51K–SR4–120–PE–DDBTXD
CHAINLINK FENCE
WOOD/WROUGHT IRON FENCE
WALL STRUCTURE
LEASE AREA
PROPERTY LINE (PL)
SETBACKS
PROPOSED ICE BRIDGE
EXISTING ICE BRIDGE
EXISTING CABLE TRAY
WATER LINE
UNDERGROUND POWER
UNDERGROUND TELCO
OVERHEAD POWER
OVERHEAD TELCO
UNDERGROUND TELCO/POWER
ABOVE GROUND POWER
ABOVE GROUND TELCO
ABOVE GROUND TELCO/POWER
WORKPOINT
SECTION REFERENCE
DETAIL REFERENCE
PHOTO REFERENCE

AB	ANCHOR BOLT
ABV	ABOVE
AC	ALTERNATING CURRENT
ADDL	ADDITIONAL
AFF	ABOVE FINISHED FLOOR
AFG	ABOVE FINISHED GRADE
AIC	AMPERAGE INTERRUPTION CAPACITY
ALUM	ALUMINUM
ALT	ALTERNATE
ANT	ANTENNA
APPROX	APPROXIMATE
ARCH	ARCHITECTURAL
ATS	AUTOMATIC TRANSFER SWITCH
AWG	AMERICAN WIRE GAUGE
BATT	BATTERY
BLDG	BUILDING
BLK	BLOCK
BLKG	BLOCKING
BM	BEAM
BTC	BARE TINNED COPPER CONDUCTOR
BOF	BOTTOM OF FOOTING
CAB	CABINET
CANT	CANTILEVERED
CEC	CALIFORNIA ELECTRIC CODE
CHG	CHARGING
CLG	CEILING
CLR	CLEAR
COL	COLUMN
COMM	COMMON
CONC	CONCRETE
CONSTR	CONSTRUCTION
DBL	DOUBLE
DC	DIRECT CURRENT
DEPT	DEPARTMENT
DF	DOUGLAS FIR
DIA	DIAMETER
DIAG	DIAGONAL
DIM	DIMENSION
DWG	DRAWING
DWL	DOWEL
(E)	EXISTING
EA	EACH
EC	ELECTRICAL CONDUCTOR
EL	ELEVATION
ELEC	ELECTRICAL
EMT	ELECTRICAL METALLIC TUBING
ENG	ENGINEER
EQ	EQUAL
EXP	EXPANSION
EXT	EXTERIOR
FAB	FABRICATION
FF	FINISH FLOOR
FG	FINISH GRADE
FIF	FACILITY INTERFACE FRAME
FIN	FINISH(ED)
FLR	FLOOR
FDN	FOUNDATION
FOC	FACE OF CONCRETE
FOM	FACE OF MASONRY
FOS	FACE OF STUD
FOW	FACE OF WALL
FS	FINISH SURFACE
FT	FOOT
FTG	FOOTING
GA	GAUGE
GEN	GENERATOR
GFCI	GROUND FAULT CIRCUIT INTERRUPTER
GLB	GLUE LAMINATED BEAM
GLV	GALVANIZED
GPS	GLOBAL POSITIONING SYSTEM
GND	GROUND
GSM	GLOBAL SYSTEM FOR MOBILE
HDR	HEADER
HGR	HANGER
HVAC	HEAT/VENTILATION/AIR CONDITIONING
HT	HEIGHT
IGR	INTERIOR GROUND RING
IN	INCH
INT	INTERIOR
LB(S)	POUND(S)
LF	LINEAR FEET
LTE	LONG TERM EVOLUTION
MAS	MASONRY
MAX	MAXIMUM
MB	MACHINE BOLT
MECH	MECHANICAL
MFR	MANUFACTURER
MGB	MASTER GROUND BAR
MIN	MINIMUM
MISC	MISCELLANEOUS
MTL	METAL
MTS	MANUAL TRANSFER SWITCH
MW	MICROWAVE
(N)	NEW
NEC	NATIONAL ELECTRIC CODE
NO.(#)	NUMBER
NTS	NOT TO SCALE
OC	ON CENTER
OPNG	OPENING
(P)	PROPOSED
P/C	PRECAST CONCRETE
PCS	PERSONAL COMMUNICATION SERVICES
PCU	PRIMARY CONTROL UNIT
PRC	PRIMARY RADIO CABINET
PP	POLARIZING PRESERVING
PSF	POUNDS PER SQUARE FOOT
PSI	POUNDS PER SQUARE INCH
PT	PRESSURE TREATED
PWR	POWER CABINET
QTY	QUANTITY
RAD	RADIUS
RECT	RECTIFIER
REF	REFERENCE
REINF	REINFORCEMENT
REQ'D	REQUIRED
RET	REMOTE ELECTRIC TILT
RMC	RIGID METALLIC CONDUIT
RRH	REMOTE RADIO HEAD
RRU	REMOTE RADIO UNIT
RWY	RACEWAY
SCH	SCHEDULE
SHT	SHEET
SIAD	SMART INTEGRATED DEVICE
SIM	SIMILAR
SPEC	SPECIFICATION
SQ	SQUARE
SS	STAINLESS STEEL
STD	STANDARD
STL	STEEL
STRUCT	STRUCTURAL
TEMP	TEMPORARY
THK	THICKNESS
TMA	TOWER MOUNTED AMPLIFIER
TN	TOE NAIL
TOA	TOP OF ANTENNA
TOC	TOP OF CURB
TOF	TOP OF FOUNDATION
TOP	TOP OF PLATE (PARAPET)
TOS	TOP OF STEEL
TOW	TOP OF WALL
TVSS	TRANSIENT VOLTAGE SUPPRESSION SYSTEM
TYP	TYPICAL
UG	UNDERGROUND
UL	UNDERWRITERS LABORATORY
UNO	UNLESS NOTED OTHERWISE
UMTS	UNIVERSAL MOBILE TELECOMMUNICATIONS SYSTEM
UPS	UNINTERRUPTIBLE POWER SYSTEM (DC POWER PLANT)
VIF	VERIFIED IN FIELD
W	WIDE
W/	WITH
WD	WOOD
W.P.	WORK POINT
WP	WEATHERPROOF
WT	WEIGHT

LEGEND & ABBREVIATIONS | 1

NOT USED | 2

APPLICANT/OWNER:

AT&T MOBILITY

8372 EAST BROAD ST.
REYNOLDSBURG, OH 43068

PREPARED BY:

BLACK & VEATCH

6800 W. 115TH ST, SUITE 2292
OVERLAND PARK, KANSAS 66211
(913) 458–2000

PROJECT NUMBER: 129021

STATE OF OHIO
PING JIANG
72759
REGISTERED
PROFESSIONAL ENGINEER
02/17/2016

IT IS A VIOLATION OF LAW FOR ANY PERSON, UNLESS THEY ARE ACTING UNDER THE DIRECTION OF A LICENSED PROFESSIONAL ENGINEER, TO ALTER THIS DOCUMENT.

LANDLORD/PROPERTY OWNER SIGNATURE

REV	DATE	DESCRIPTION
0	02.17.16	ISSUED FOR CONSTRUCTION

PROJECT LOCATION: USID (59304)

GAHANNA HIGH SCHOOL

511 HAVENS CORNERS ROAD
GAHANNA, OH 43230

DRAWING DESCRIPTION:

GENERAL NOTES

DRAWING NUMBER:

N-1

GENERAL CONSTRUCTION

1. FOR THE PURPOSE OF CONSTRUCTION DRAWINGS, THE FOLLOWING DEFINITIONS SHALL APPLY:
   GENERAL CONTRACTOR – OVERLAND CONTRACTING INC. (B&V)
   CONTRACTOR: (CONSTRUCTION)
   OWNER – AT&T
2. ALL SITE WORK SHALL BE COMPLETED AS INDICATED ON THE DRAWINGS AND AT&T PROJECT SPECIFICATIONS.
3. GENERAL CONTRACTOR SHALL VISIT THE SITE AND SHALL FAMILIARIZE HIMSELF WITH ALL CONDITIONS AFFECTING THE PROPOSED WORK AND SHALL MAKE PROVISIONS. GENERAL CONTRACTOR SHALL BE RESPONSIBLE FOR FAMILIARIZING HIMSELF WITH ALL CONTRACT DOCUMENTS, FIELD CONDITIONS, DIMENSIONS, AND CONFIRMING THAT THE WORK MAY BE ACCOMPLISHED AS SHOWN PRIOR TO PROCEEDING WITH CONSTRUCTION. ANY DISCREPANCIES SHALL BE BROUGHT TO THE ATTENTION OF THE ENGINEER PRIOR TO THE COMMENCEMENT OF WORK.
4. ALL MATERIALS FURNISHED AND INSTALLED SHALL BE IN STRICT ACCORDANCE WITH ALL APPLICABLE CODES, REGULATIONS, AND ORDINANCES. GENERAL CONTRACTOR SHALL ISSUE ALL APPROPRIATE NOTICES AND COMPLY WITH ALL LAWS, ORDINANCES, RULES, REGULATIONS, AND LAWFUL ORDERS OF ANY PUBLIC AUTHORITY REGARDING THE PERFORMANCE OF WORK.
5. ALL WORK CARRIED OUT SHALL COMPLY WITH ALL APPLICABLE MUNICIPAL AND UTILITY COMPANY SPECIFICATIONS AND LOCAL JURISDICTIONAL CODES, ORDINANCES, AND APPLICABLE REGULATIONS.
6. UNLESS NOTED OTHERWISE, THE WORK SHALL INCLUDE FURNISHING MATERIALS, EQUIPMENT, APPURTENANCES, AND LABOR NECESSARY TO COMPLETE ALL INSTALLATIONS AS INDICATED ON THE DRAWINGS.
7. PLANS ARE NOT TO BE SCALED. THESE PLANS ARE INTENDED TO BE A DIAGRAMMATIC OUTLINE ONLY UNLESS OTHERWISE NOTED. DIMENSIONS SHOWN ARE TO FINISH SURFACES UNLESS OTHERWISE NOTED. SPACING BETWEEN EQUIPMENT IS THE MINIMUM REQUIRED CLEARANCE. THEREFORE, IT IS CRITICAL TO FIELD VERIFY DIMENSIONS, SHOULD THERE BE ANY QUESTIONS REGARDING THE CONTRACT DOCUMENTS, THE CONTRACTOR SHALL BE RESPONSIBLE FOR OBTAINING A CLARIFICATION FROM THE ENGINEER PRIOR TO PROCEEDING WITH THE WORK. DETAILS ARE INTENDED TO SHOW DESIGN INTENT. MODIFICATIONS MAY BE REQUIRED TO SUIT JOB DIMENSIONS OR CONDITIONS AND SUCH MODIFICATIONS SHALL BE INCLUDED AS PART OF WORK AND PREPARED BY THE ENGINEER PRIOR TO PROCEEDING WITH WORK.
8. THE CONTRACTOR SHALL INSTALL ALL EQUIPMENT AND MATERIALS IN ACCORDANCE WITH MANUFACTURER'S RECOMMENDATIONS UNLESS SPECIFICALLY STATED OTHERWISE.
9. IF THE SPECIFIED EQUIPMENT CANNOT BE INSTALLED AS SHOWN ON THESE DRAWINGS, THE CONTRACTOR SHALL PROPOSE AN ALTERNATIVE INSTALLATION SPACE FOR APPROVAL BY THE ENGINEER PRIOR TO PROCEEDING.
10. GENERAL CONTRACTOR SHALL BE RESPONSIBLE FOR THE SAFETY OF WORK AREA, ADJACENT AREAS AND BUILDING OCCUPANTS THAT ARE LIKELY TO BE AFFECTED BY THE WORK UNDER THIS CONTRACT. WORK SHALL CONFIRM TO ALL OSHA REQUIREMENTS AND THE LOCAL JURISDICTION.
11. GENERAL CONTRACTOR SHALL COORDINATE WORK AND SCHEDULE WORK ACTIVITIES WITH OTHER DISCIPLINES.
12. ERECTION SHALL BE DONE IN A WORKMANLIKE MANNER BY COMPETENT EXPERIENCED WORKMAN IN ACCORDANCE WITH APPLICABLE CODES AND THE BEST ACCEPTED PRACTICE. ALL MEMBERS SHALL BE LAID PLUMB AND TRUE AS INDICATED ON THE DRAWINGS.
13. SEAL PENETRATIONS THROUGH FIRE RATED AREAS WITH UL LISTED MATERIALS APPROVED BY LOCAL JURISDICTION. CONTRACTOR SHALL KEEP AREA CLEAN, HAZARD FREE, AND DISPOSE OF ALL DEBRIS.
14. WORK PREVIOUSLY COMPLETED IS REPRESENTED BY LIGHT SHADED LINES AND NOTES. THE SCOPE OF WORK FOR THIS PROJECT IS REPRESENTED BY DARK SHADED LINES AND NOTES. CONTRACTOR SHALL NOTIFY THE GENERAL CONTRACTOR OF ANY EXISTING CONDITIONS THAT DEVIATE FROM THE DRAWINGS PRIOR TO BEGINNING CONSTRUCTION.
15. CONTRACTOR SHALL PROVIDE WRITTEN NOTICE TO THE CONSTRUCTION MANAGER 48 HOURS PRIOR TO COMMENCEMENT OF WORK.
16. THE CONTRACTOR SHALL PROTECT EXISTING IMPROVEMENTS, PAVEMENTS, CURBS, LANDSCAPING AND STRUCTURES. ANY DAMAGED PART SHALL BE REPAIRED AT CONTRACTOR'S EXPENSE TO THE SATISFACTION OF THE OWNER.
17. THE CONTRACTOR SHALL CONTACT UTILITY LOCATING SERVICES PRIOR TO THE START OF CONSTRUCTION.
18. GENERAL CONTRACTOR SHALL COORDINATE AND MAINTAIN ACCESS FOR ALL TRADES AND CONTRACTORS TO THE SITE AND/OR BUILDING.
19. THE GENERAL CONTRACTOR SHALL BE RESPONSIBLE FOR SECURITY OF THE SITE FOR THE DURATION OF CONSTRUCTION UNTIL JOB COMPLETION.
20. THE GENERAL CONTRACTOR SHALL MAINTAIN IN GOOD CONDITION ONE COMPLETE SET OF PLANS WITH ALL REVISIONS, ADDENDA, AND CHANGE ORDERS ON THE PREMISES AT ALL TIMES.
21. THE GENERAL CONTRACTOR SHALL PROVIDE PORTABLE FIRE EXTINGUISHERS WITH A RATING OF NOT LESS THAN 2–A OT 2–A:10–B:C AND SHALL BE WITHIN 25 FEET OF TRAVEL DISTANCE TO ALL PORTIONS OF WHERE THE WORK IS BEING COMPLETED DURING CONSTRUCTION.
22. ALL EXISTING ACTIVE SEWER, WATER, GAS, ELECTRIC, AND OTHER UTILITIES SHALL BE PROTECTED AT ALL TIMES, AND WHERE REQUIRED FOR THE PROPER EXECUTION OF THE WORK, SHALL BE RELOCATED AS DIRECTED BY THE ENGINEER. EXTREME CAUTION SHOULD BE USED BY THE CONTRACTOR WHEN EXCAVATING OR DRILLING PIERS AROUND OR NEAR UTILITIES. CONTRACTOR SHALL PROVIDE SAFETY TRAINING FOR THE WORKING CREW. THIS SHALL INCLUDE BUT NOT BE LIMITED TO A) FALL PROTECTION, B) CONFINED SPACE, C) ELECTRICAL SAFETY, AND D) TRENCHING & EXCAVATION.
23. ALL EXISTING INACTIVE SEWER, WATER, GAS, ELECTRIC, AND OTHER UTILITIES, WHICH INTERFERE WITH THE EXECUTION OF THE WORK, SHALL BE REMOVED, CAPPED, PLUGGED OR OTHERWISE DISCONNECTED AT POINTS WHICH WILL NOT INTERFERE WITH THE EXECUTION OF THE WORK, AS DIRECTED BY THE RESPONSIBLE ENGINEER, AND SUBJECT TO THE APPROVAL OF THE OWNER AND/OR LOCAL UTILITIES.
24. THE AREAS OF THE OWNER'S PROPERTY DISTURBED BY THE WORK AND NOT COVERED BY THE TOWER, EQUIPMENT OR DRIVEWAY, SHALL BE GRADED TO A UNIFORM SLOPE, AND STABILIZED TO PREVENT EROSION.
25. CONTRACTOR SHALL MINIMIZE DISTURBANCE TO THE EXISTING SITE DURING CONSTRUCTION. EROSION CONTROL MEASURES, IF REQUIRED DURING CONSTRUCTION, SHALL BE IN CONFORMANCE WITH THE FEDERAL AND LOCAL JURISDICTION FOR EROSION AND SEDIMENT CONTROL.
26. NO FILL OR EMBANKMENT MATERIAL SHALL BE PLACED ON FROZEN GROUNDING. FROZEN MATERIALS, SNOW OR ICE SHALL NOT BE PLACED IN ANY FILL OR EMBANKMENT.
27. THE SUBGRADE SHALL BE BROUGHT TO A SMOOTH UNIFORM GRADE AND COMPACTED TO 95 PERCENT STANDARD PROCTOR DENSITY UNDER PAVEMENT AND STRUCTURES AND 80 PERCENT STANDARD PROCTOR DENSITY IN OPEN SPACE. ALL TRENCHES IN PUBLIC RIGHT OF WAY SHALL BE BACKFILLED WITH FLOWABLE FILL OR OTHER MATERIAL PRE–APPROVED BY THE LOCAL JURISDICTION.
28. ALL NECESSARY RUBBISH, STUMPS, DEBRIS, STICKS, STONES, AND OTHER REFUSE SHALL BE REMOVED FROM THE SITE AND DISPOSED OF IN A LAWFUL MANNER.
29. ALL BROCHURES, OPERATING AND MAINTENANCE MANUALS, CATALOGS, SHOP DRAWINGS, AND OTHER DOCUMENTS SHALL BE TURNED OVER TO THE GENERAL CONTRACTOR AT COMPLETION OF CONSTRUCTION AND PRIOR TO PAYMENT.
30. CONTRACTOR SHALL SUBMIT A COMPLETE SET OF AS–BUILT REDLINES TO THE GENERAL CONTRACTOR UPON COMPLETION OF PROJECT AND PRIOR TO FINAL PAYMENT.
31. CONTRACTOR SHALL LEAVE PREMISES IN A CLEAN CONDITION.
32. THE PROPOSED FACILITY WILL BE UNMANNED AND DOES NOT REQUIRE POTABLE WATER OR SEWER SERVICE, AND IS NOT FOR HUMAN HABITAT (NO HANDICAP ACCESS REQUIRED).
33. OCCUPANCY IS LIMITED TO PERIODIC MAINTENANCE AND INSPECTION, APPROXIMATELY 2 TIMES PER MONTH, BY AT&T TECHNICIANS.
34. NO OUTDOOR STORAGE OR SOLID WASTE CONTAINERS ARE PROPOSED.
35. ALL MATERIAL SHALL BE FURNISHED AND WORK SHALL BE PERFORMED IN ACCORDANCE WITH THE LATEST REVISION AT&T MOBILITY GROUNDING STANDARD "TECHNICAL SPECIFICATION FOR CONSTRUCTION OF GSM/GPRS WIRELESS SITES" AND "TECHNICAL SPECIFICATION FOR FACILITY GROUNDING". IN CASE OF A CONFLICT BETWEEN THE CONSTRUCTION SPECIFICATION AND THE DRAWINGS, THE DRAWINGS SHALL GOVERN.
36. CONTRACTORS SHALL BE RESPONSIBLE FOR OBTAINING ALL PERMITS AND INSPECTIONS REQUIRED FOR CONSTRUCTION. IF CONTRACTOR CANNOT OBTAIN A PERMIT, THEY MUST NOTIFY THE GENERAL CONTRACTOR IMMEDIATELY.
37. CONTRACTOR SHALL REMOVE ALL TRASH AND DEBRIS FROM THE SITE ON A DAILY BASIS.
38. INFORMATION SHOWN ON THESE DRAWINGS WAS OBTAINED FROM SITE VISITS AND/OR DRAWINGS PROVIDED BY THE SITE OWNER. CONTRACTORS SHALL NOTIFY THE ENGINEER OF ANY DISCREPANCIES PRIOR TO ORDERING MATERIAL OR PROCEEDING WITH CONSTRUCTION.
39. NO WHITE STROBE LIGHTS ARE PERMITTED. LIGHTING IF REQUIRED, WILL MEET FAA STANDARDS AND REQUIREMENTS.
40. ALL COAXIAL CABLE INSTALLATIONS TO FOLLOW MANUFACTURER'S INSTRUCTIONS AND RECOMMENDATIONS.
41. CONTRACTOR WILL REFER TO LATEST RFDS SHEET PRIOR TO CONSTRUCTION COMMENCING.

APPLICANT/OWNER:

AT&T MOBILITY

8372 EAST BROAD ST.
REYNOLDSBURG, OH 43068

PREPARED BY:

BLACK & VEATCH

6800 W. 115TH ST, SUITE 2292
OVERLAND PARK, KANSAS 66211
(913) 458–2000

PROJECT NUMBER: 129021

STATE OF OHIO
PING JIANG
72759
REGISTERED
PROFESSIONAL ENGINEER
02/17/2016

IT IS A VIOLATION OF LAW FOR ANY PERSON, UNLESS THEY ARE ACTING UNDER THE DIRECTION OF A LICENSED PROFESSIONAL ENGINEER, TO ALTER THIS DOCUMENT.

LANDLORD/PROPERTY OWNER SIGNATURE

REV	DATE	DESCRIPTION
0	02.17.16	ISSUED FOR CONSTRUCTION

PROJECT LOCATION: USID (59304)

GAHANNA HIGH SCHOOL

511 HAVENS CORNERS ROAD
GAHANNA, OH 43230

DRAWING DESCRIPTION:

GENERAL NOTES

DRAWING NUMBER:

N-2